HJÄLPA

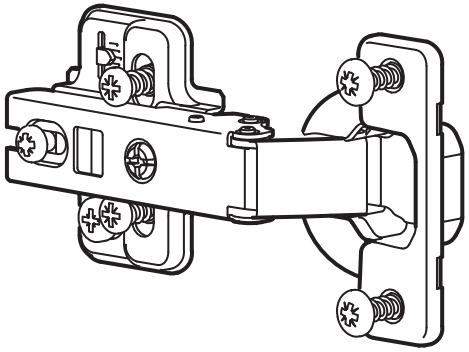

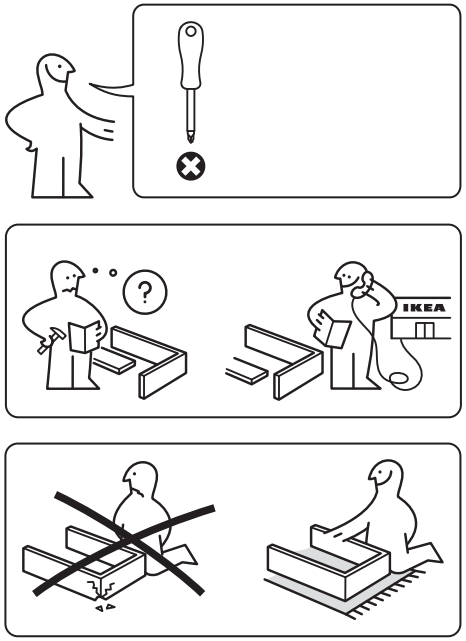

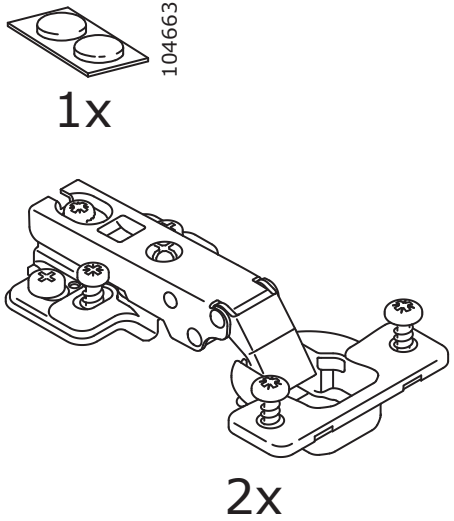

1

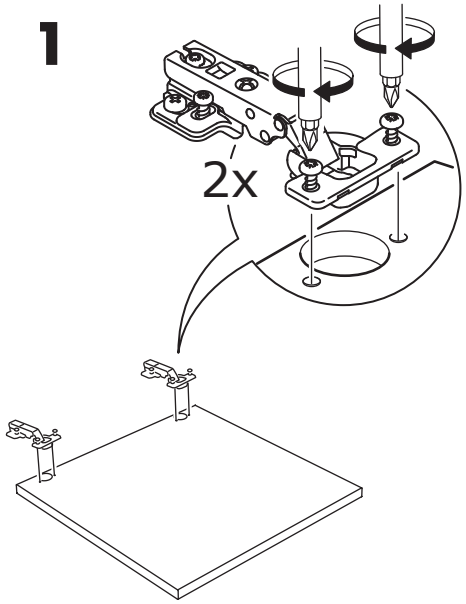

Design and Quality
IKEA of Sweden

2

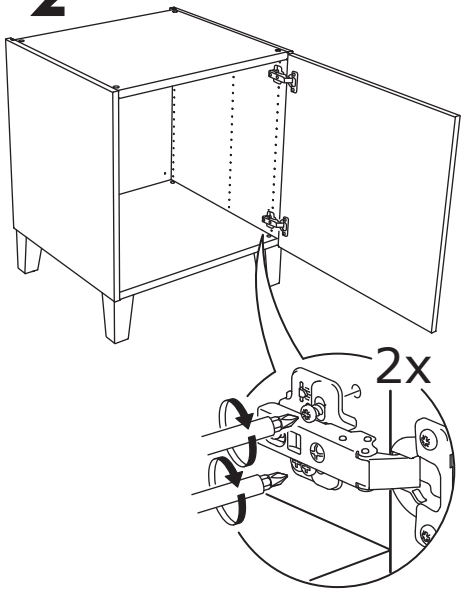

3

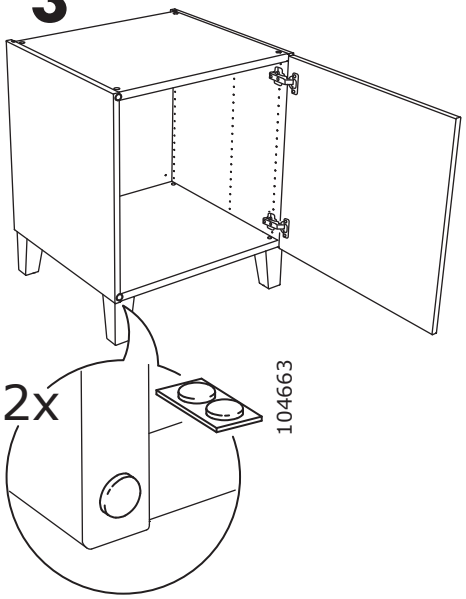

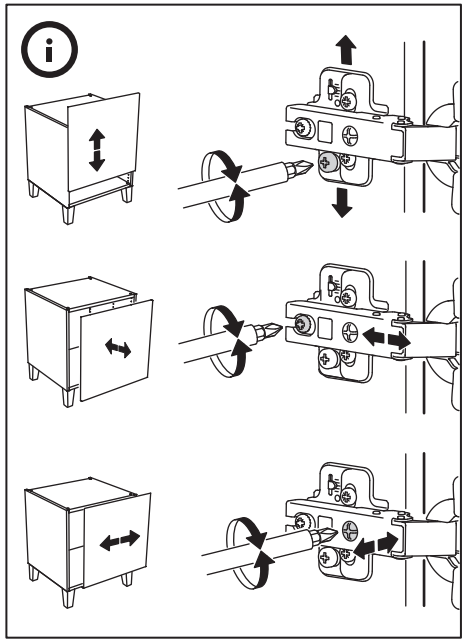

© Inter IKEA Systems B.V. 2017

2017-11-24
AA-1914482-4