ENHOLMEN

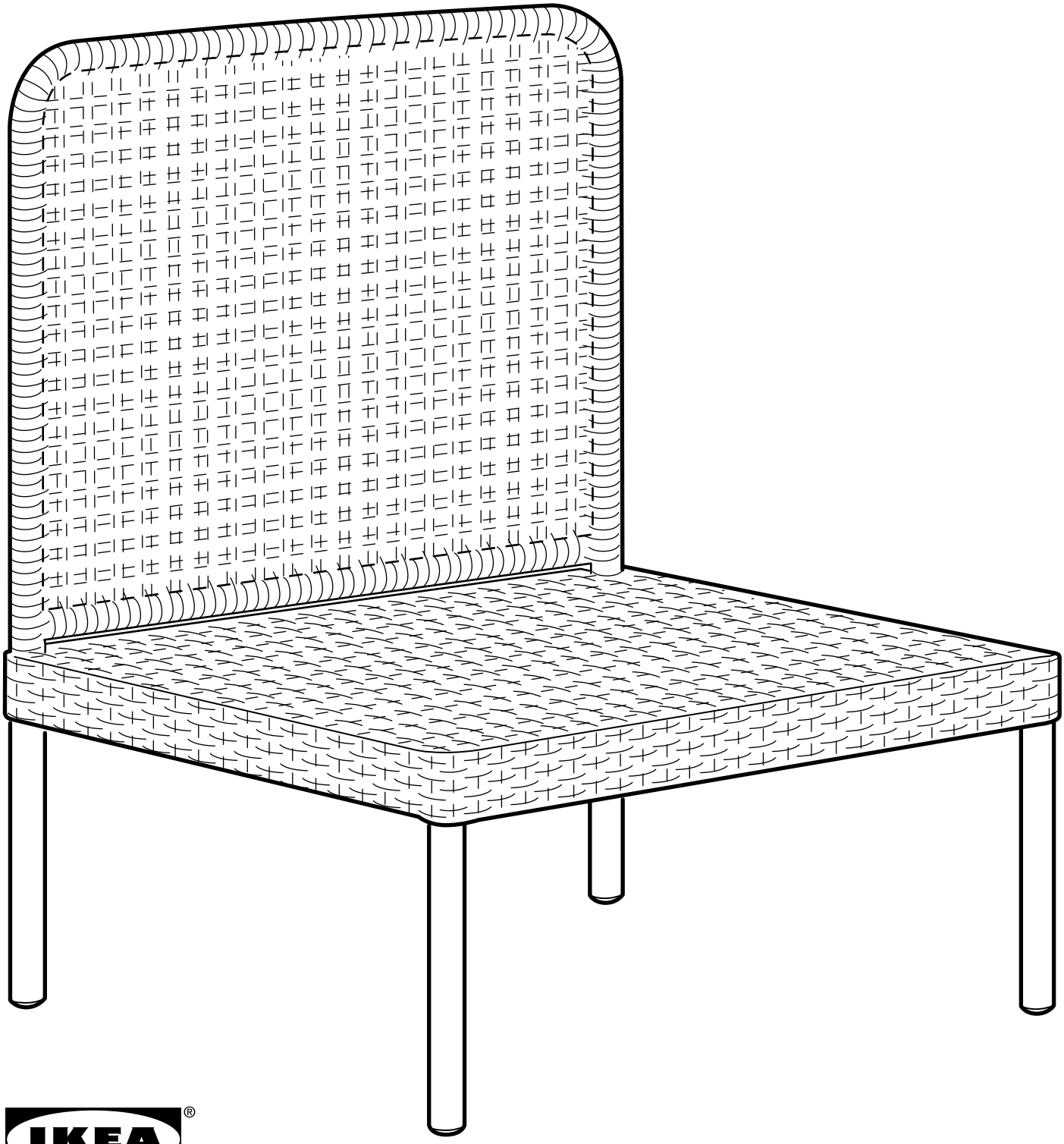

Design and Quality
IKEA of Sweden

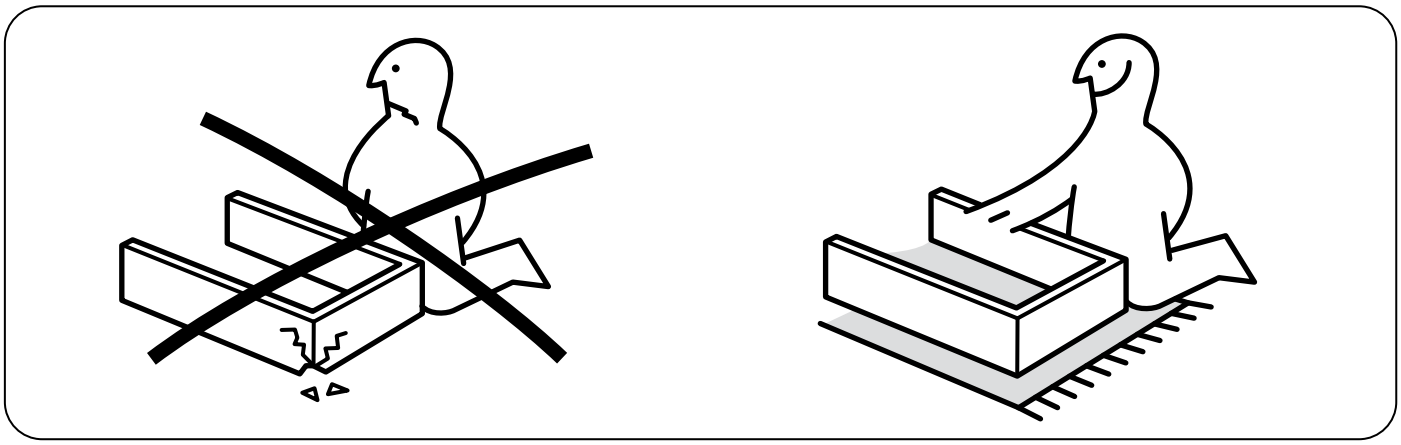

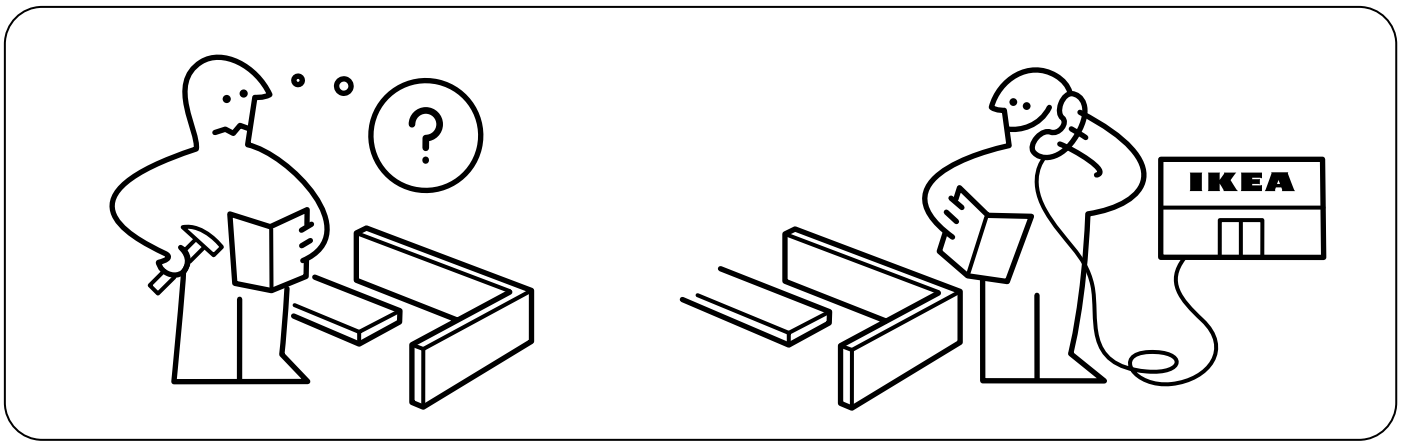
IKEA

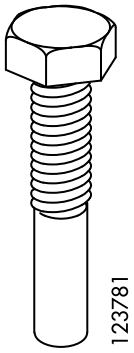

4x

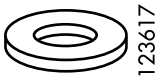

4x

4x

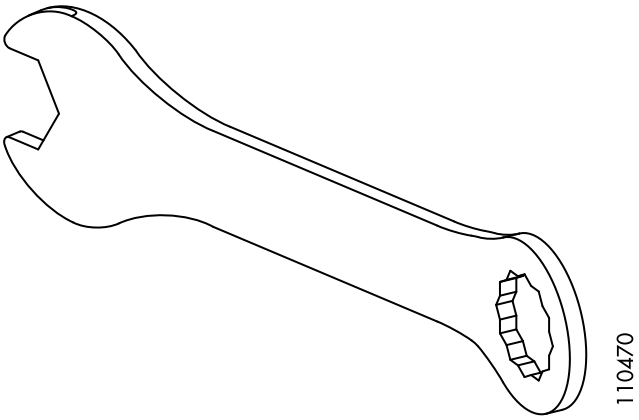

1x

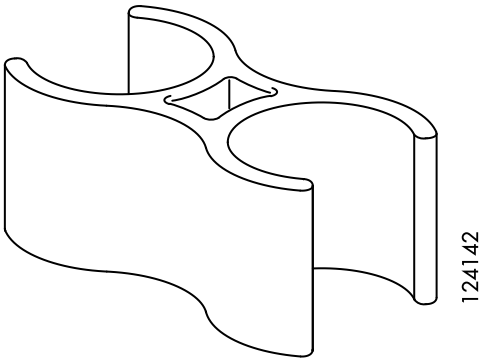

2x

1

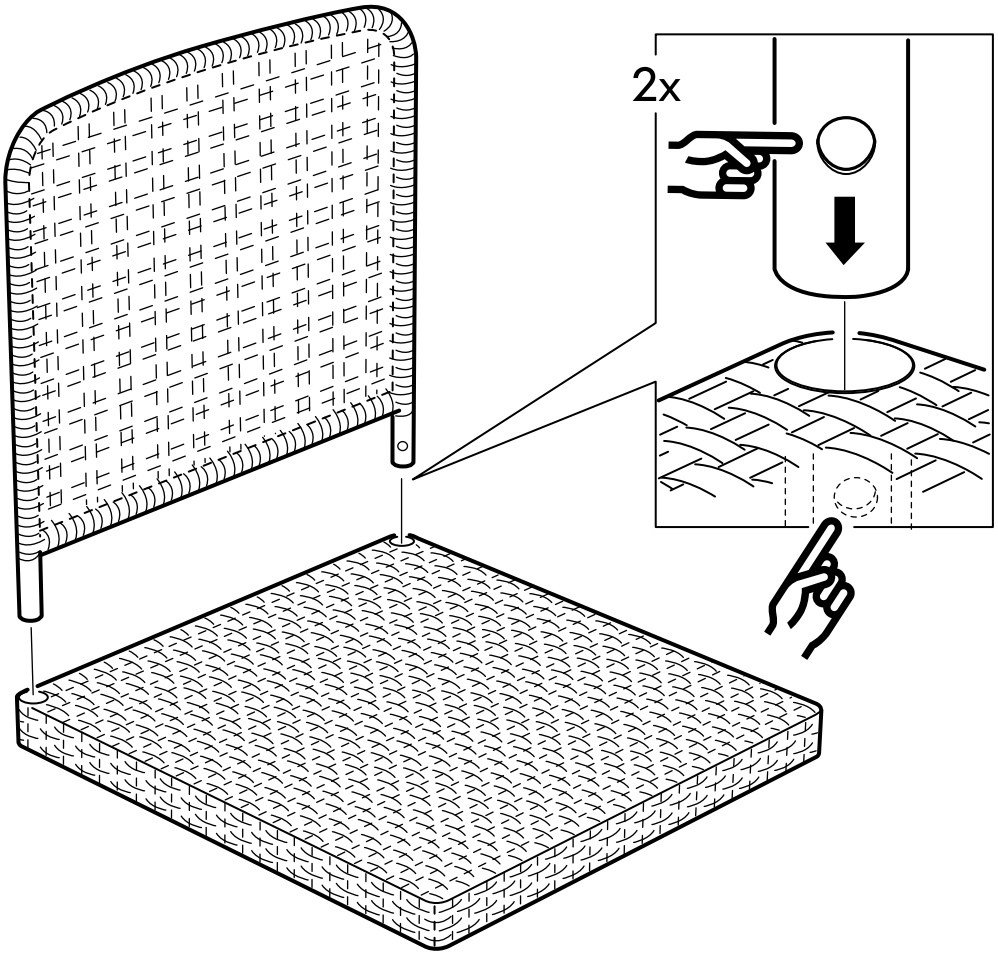

2

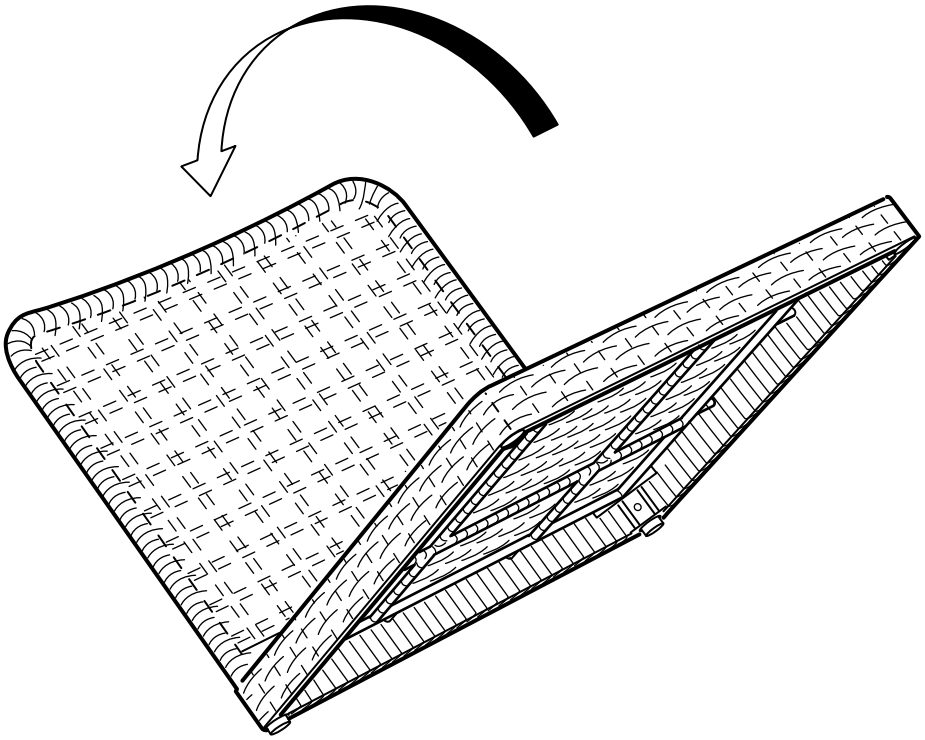

3

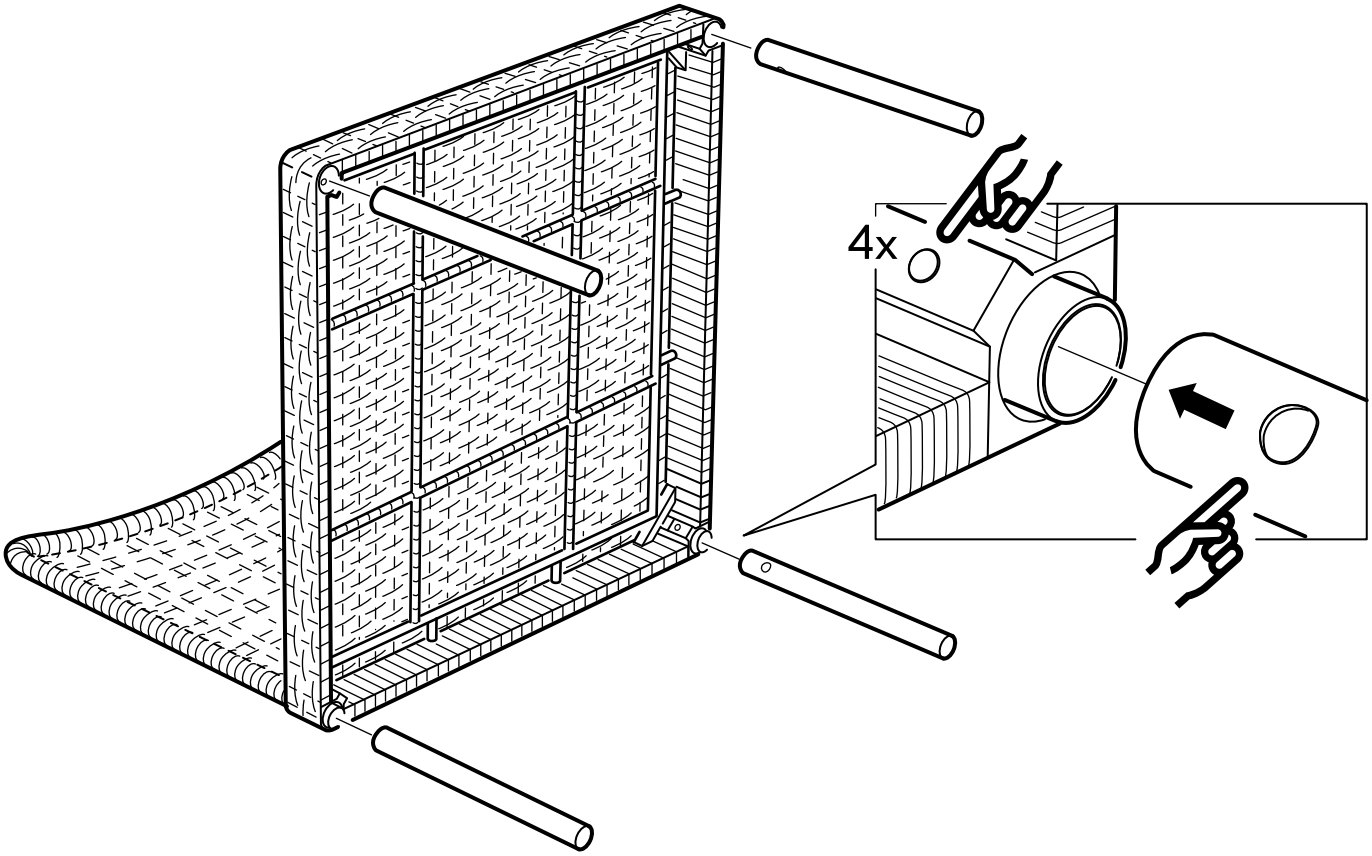

4

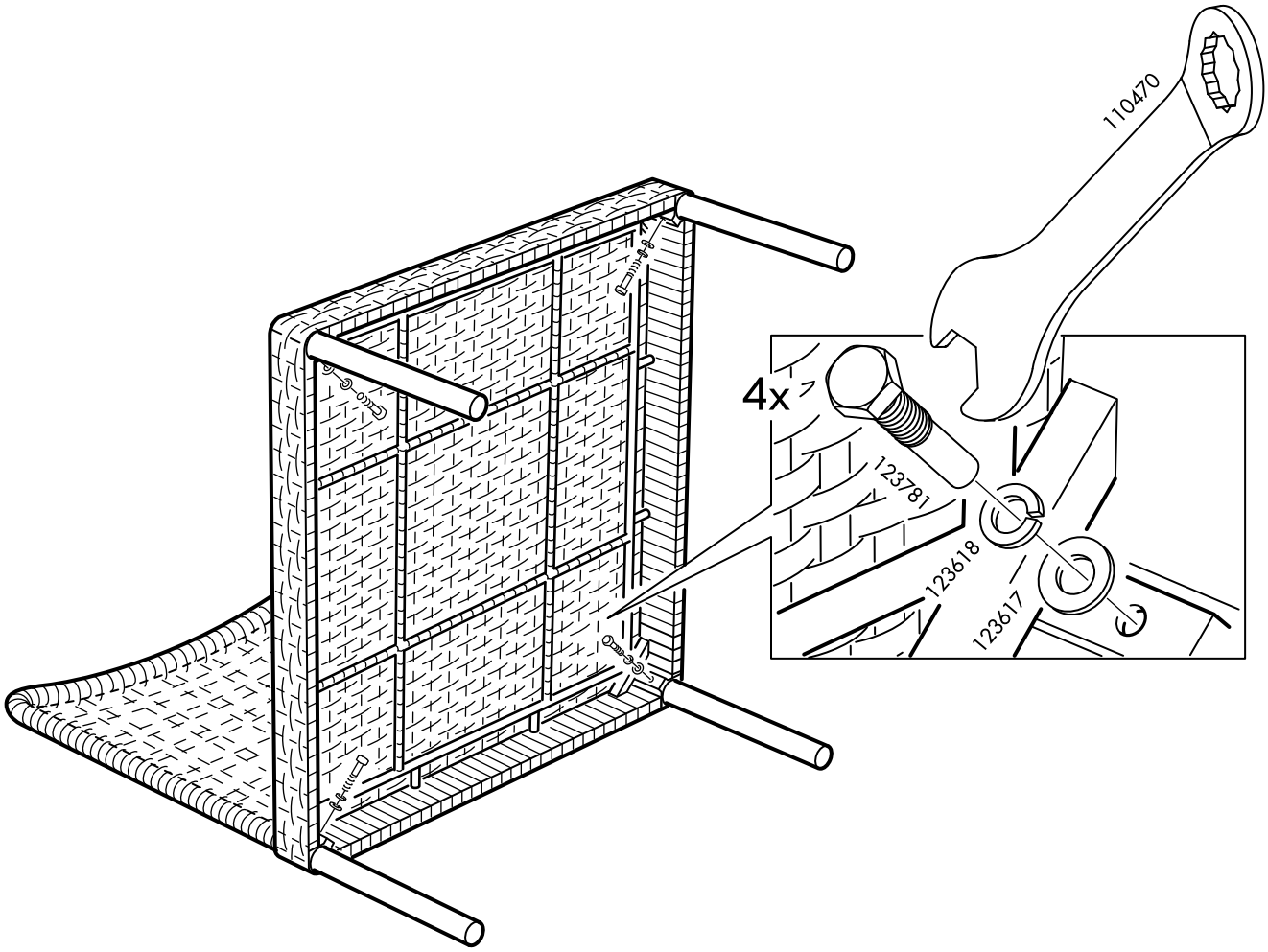

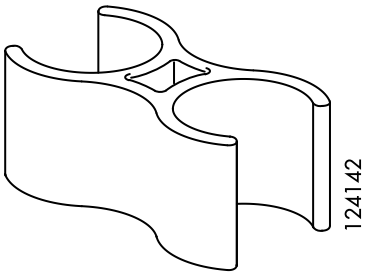

5

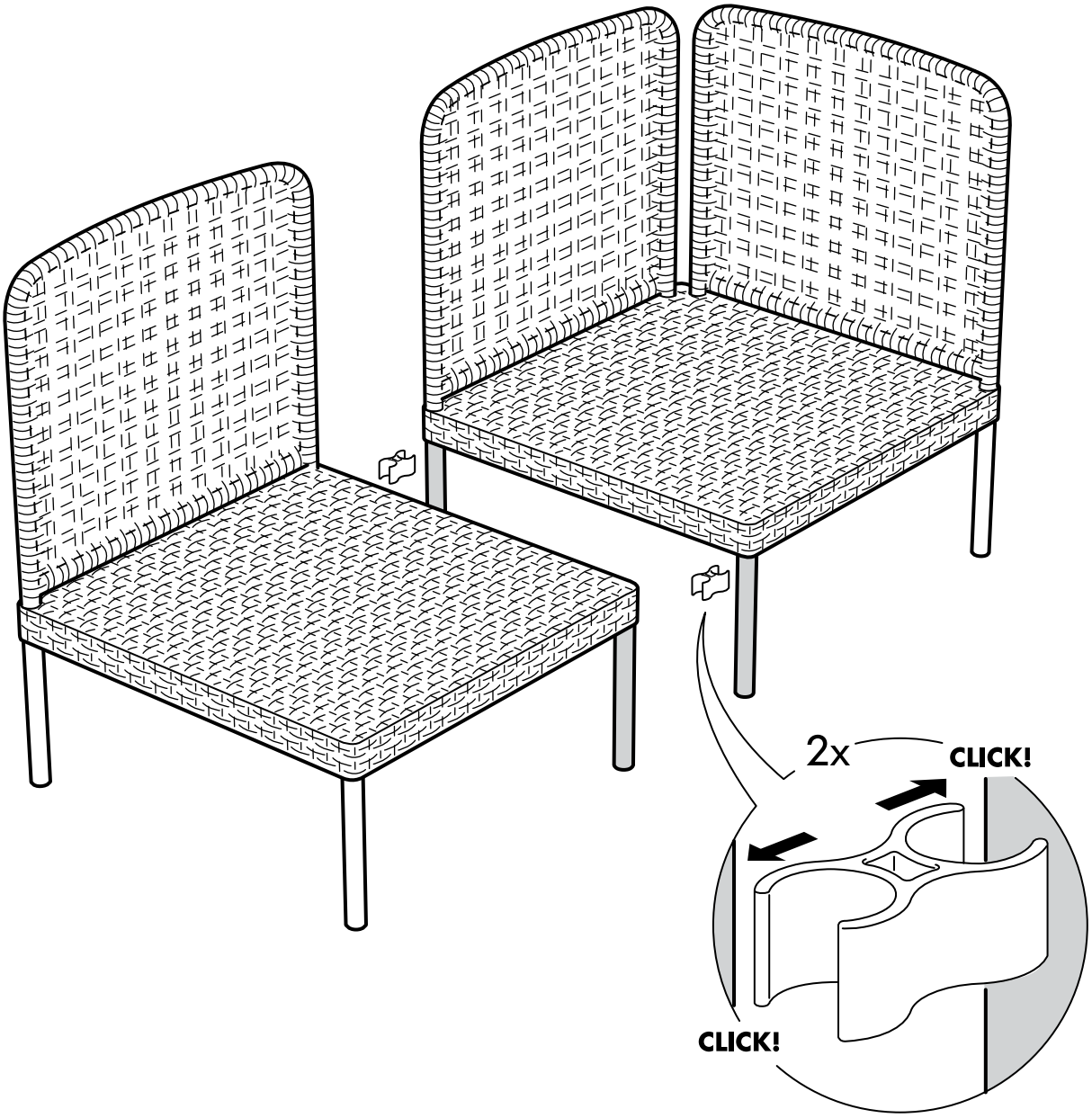

© Inter IKEA Systems B.V. 2011