VÄSTANÅ

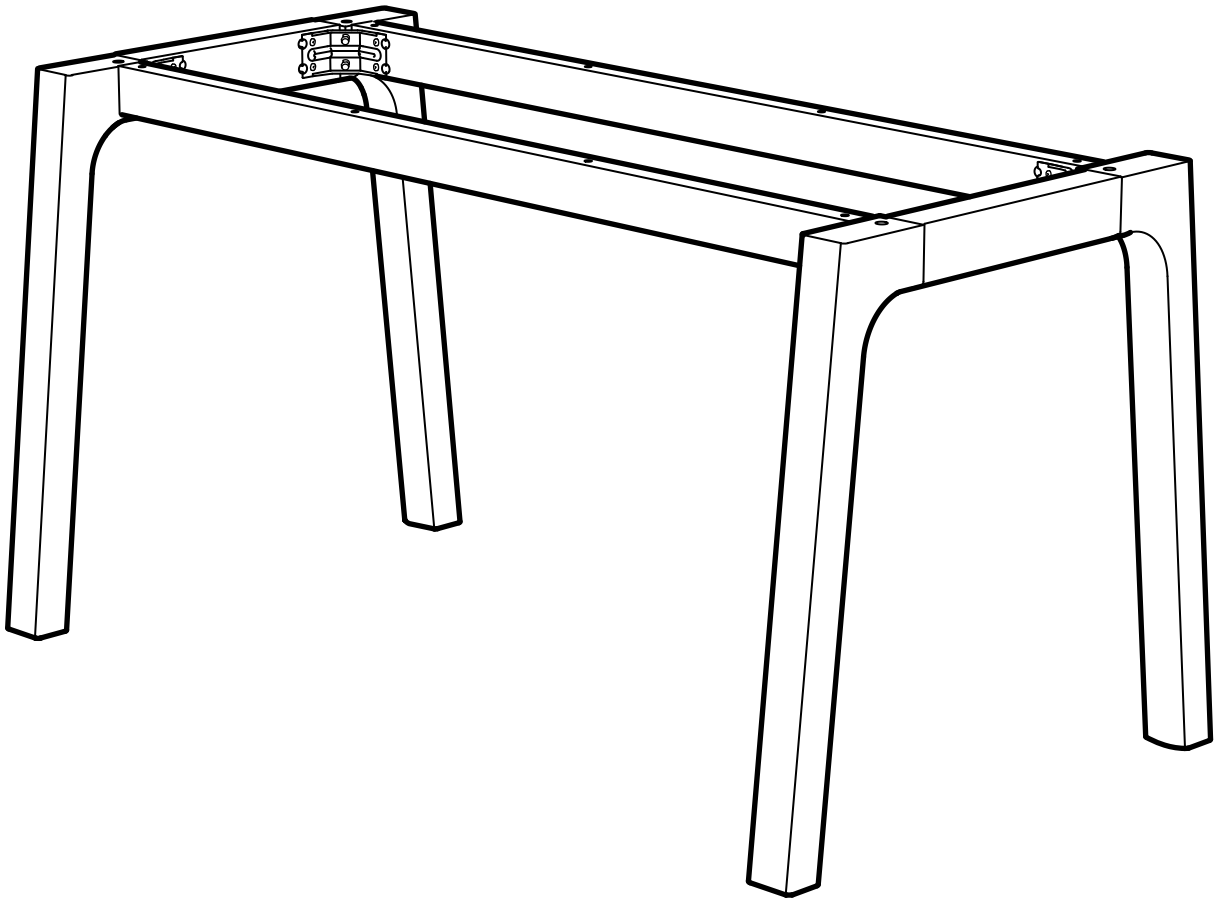

Design and Quality
IKEA of Sweden

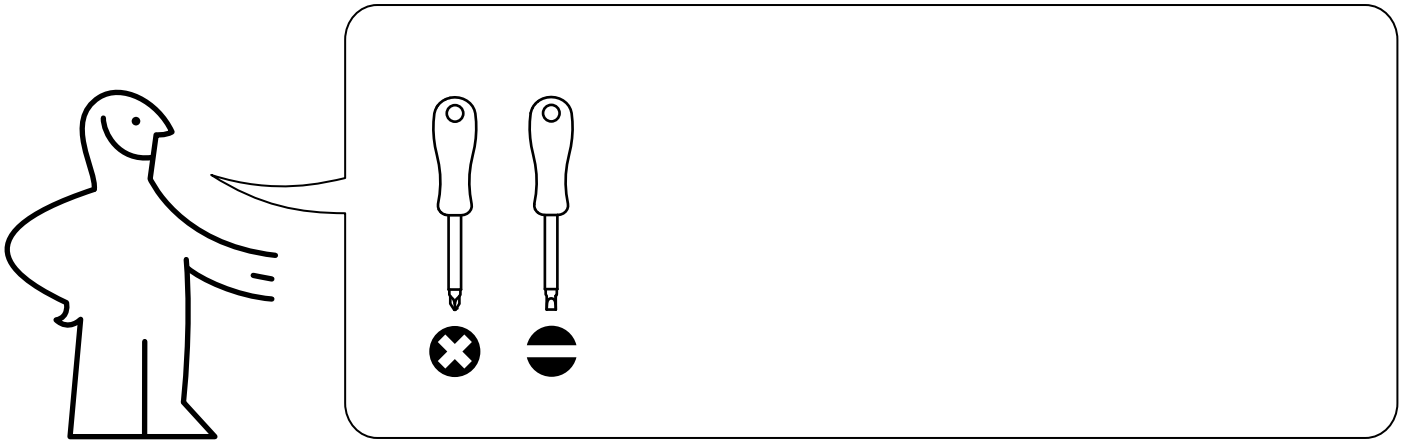

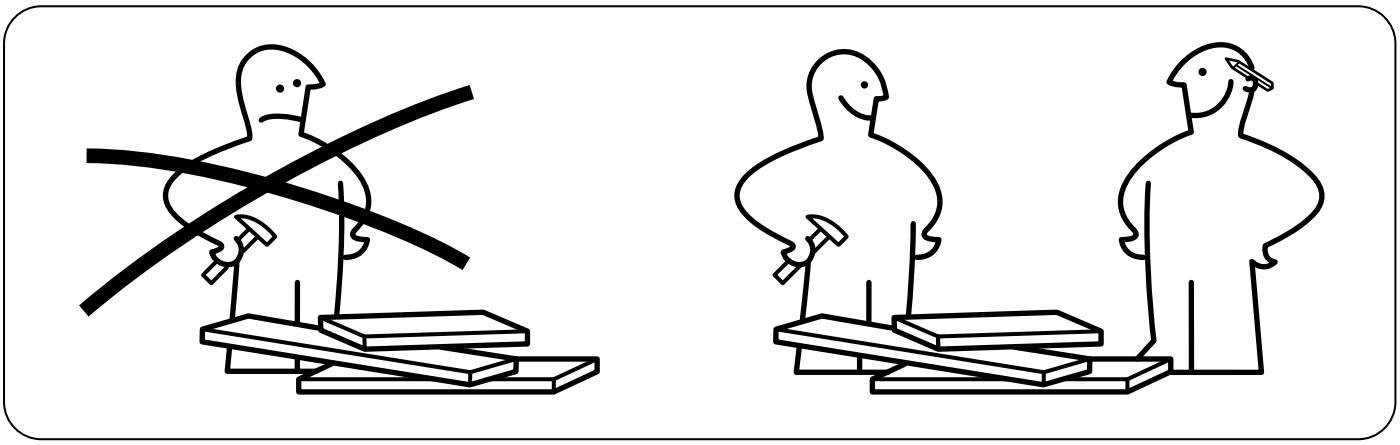

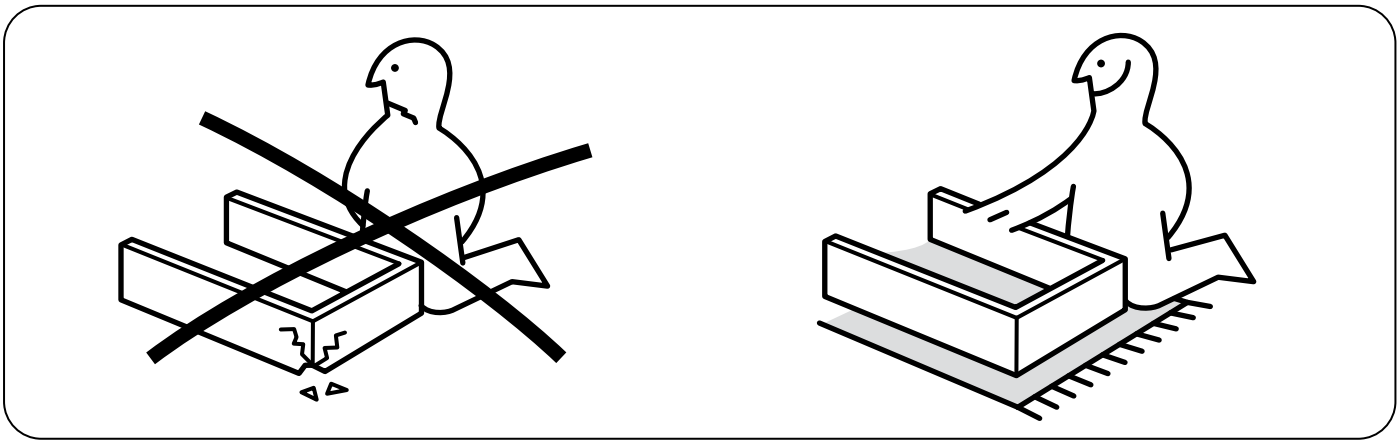

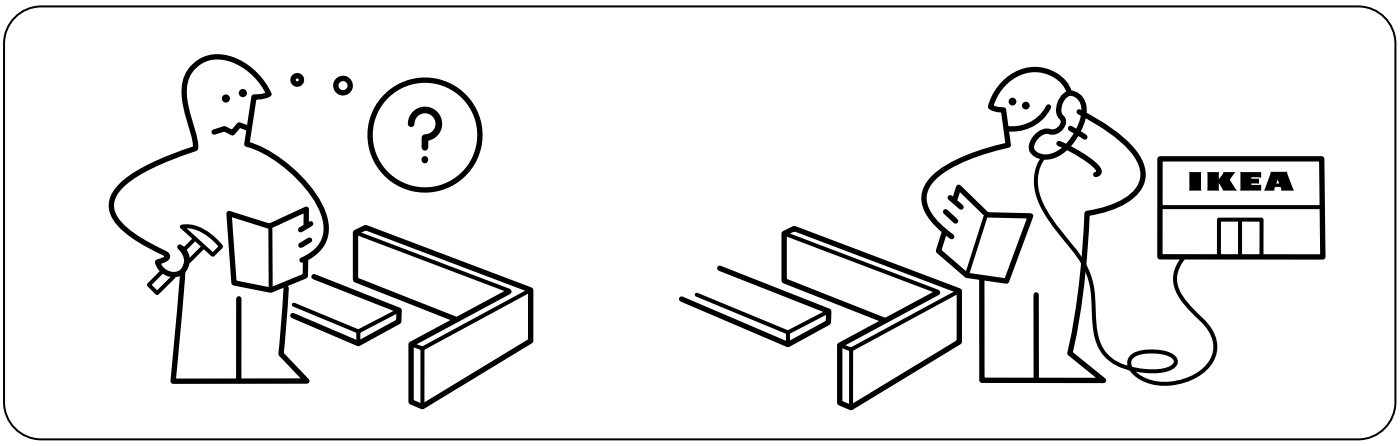
?
IKEA

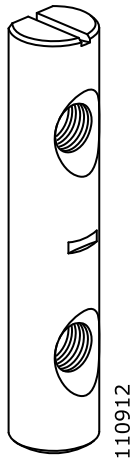

4x

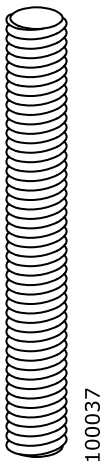

8x

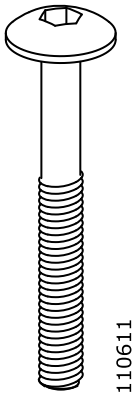

8x

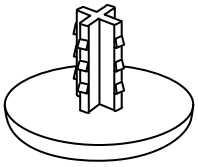

4x

16x

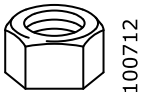

8x

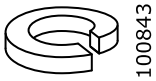

8x

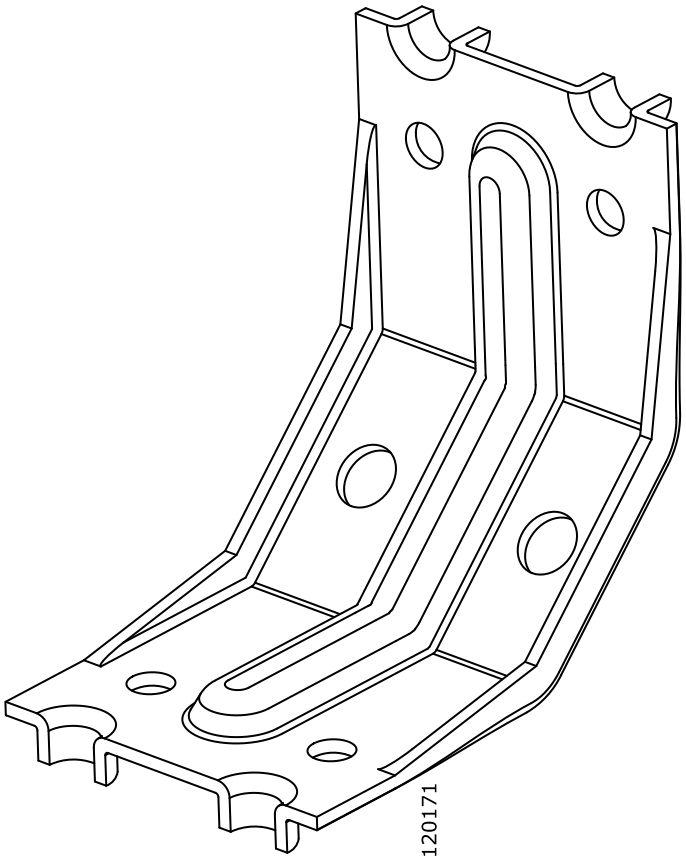

4x

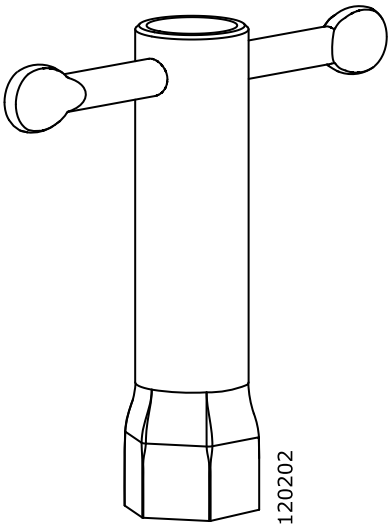

1x

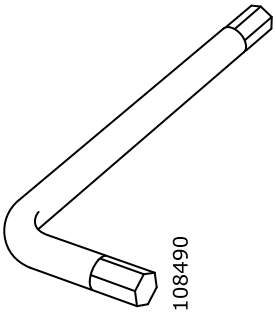

1x

1

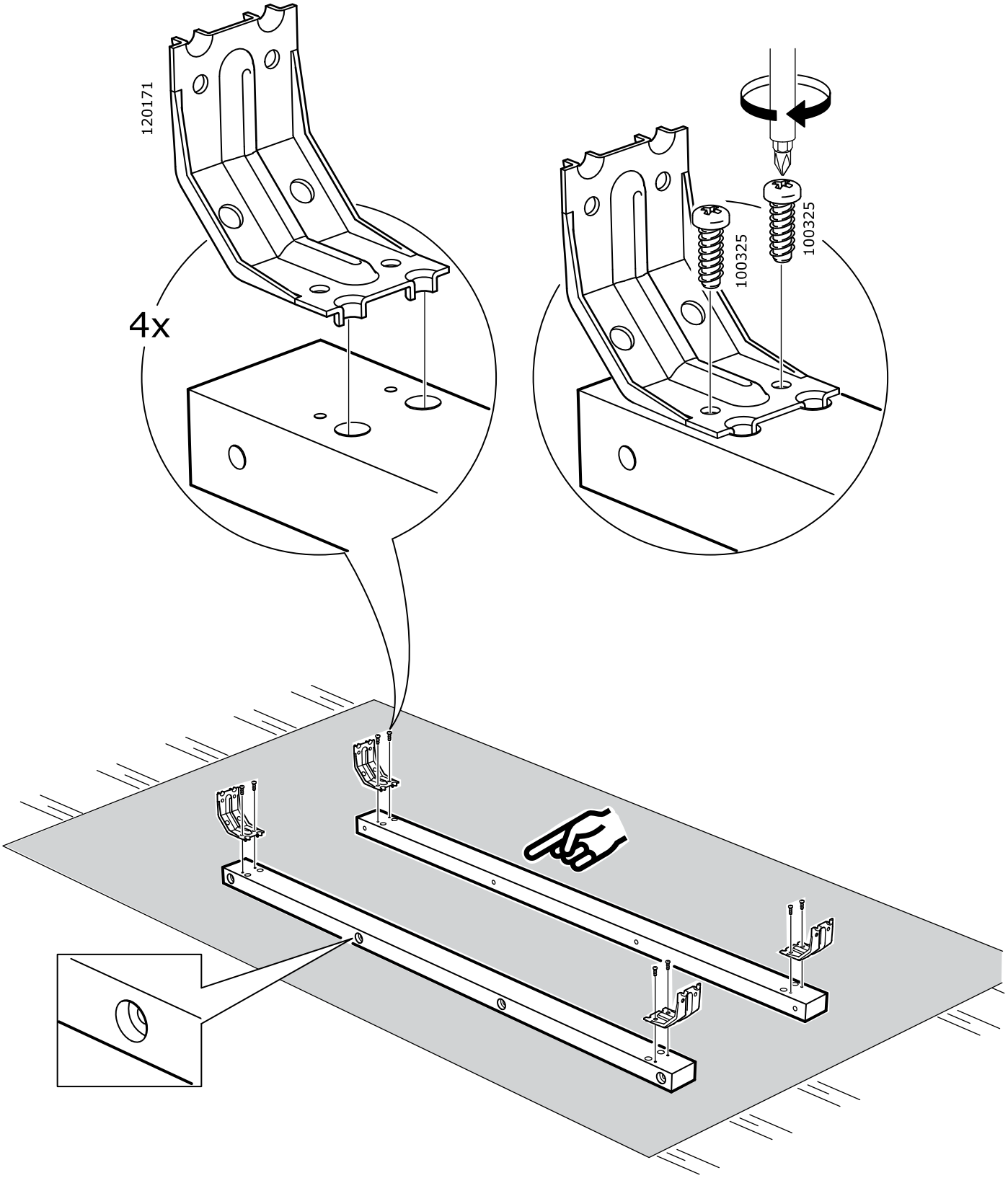

2

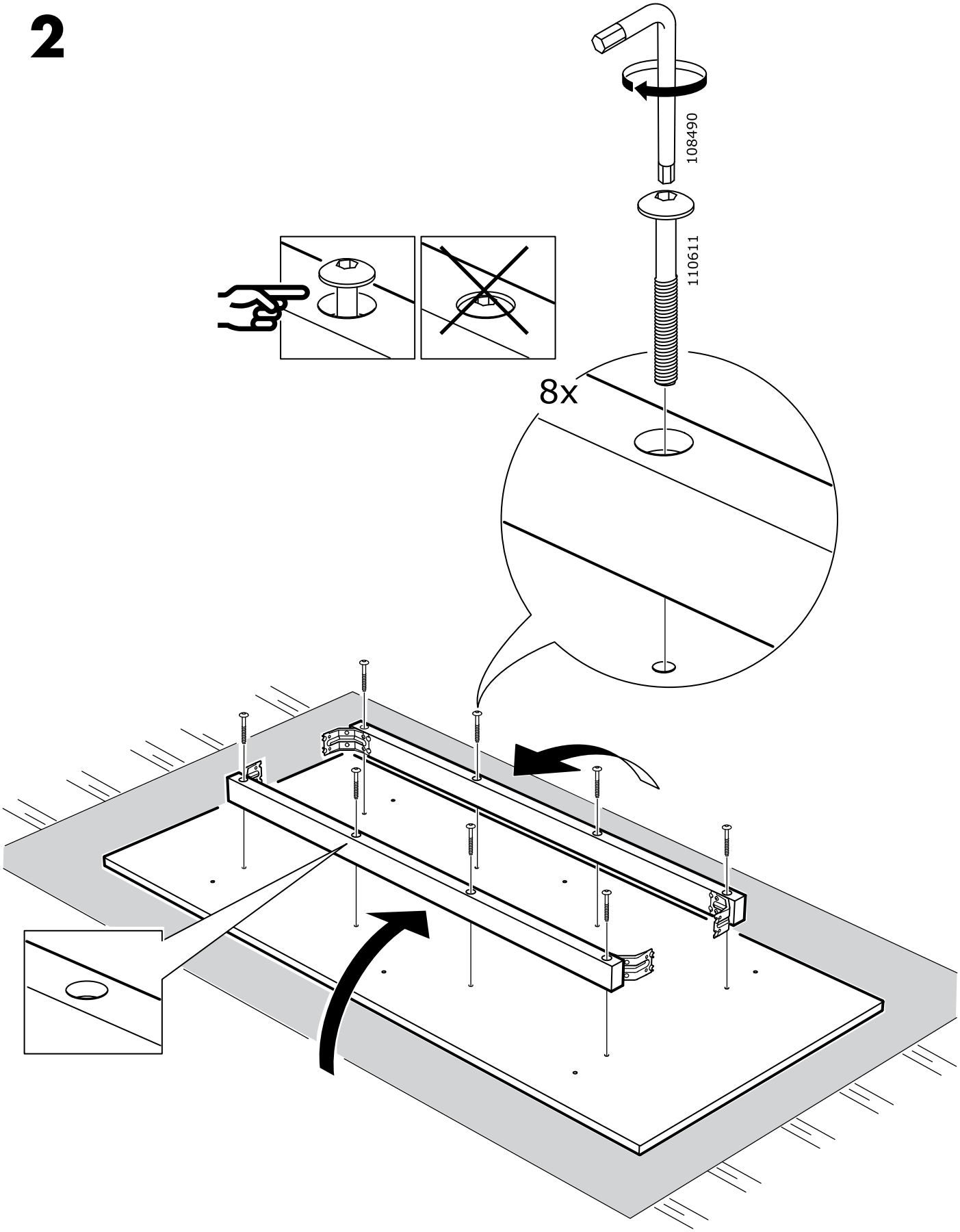

3

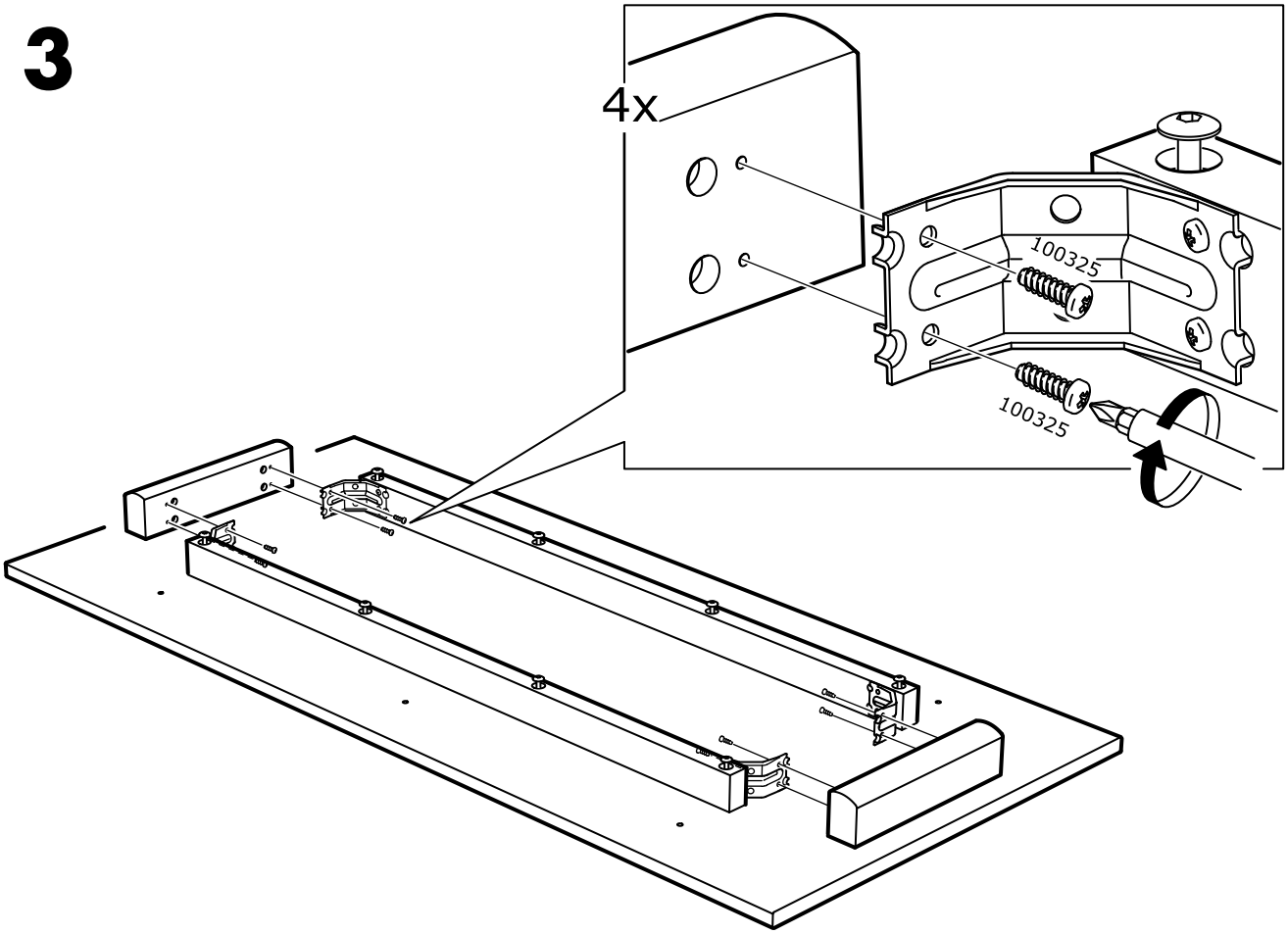

4

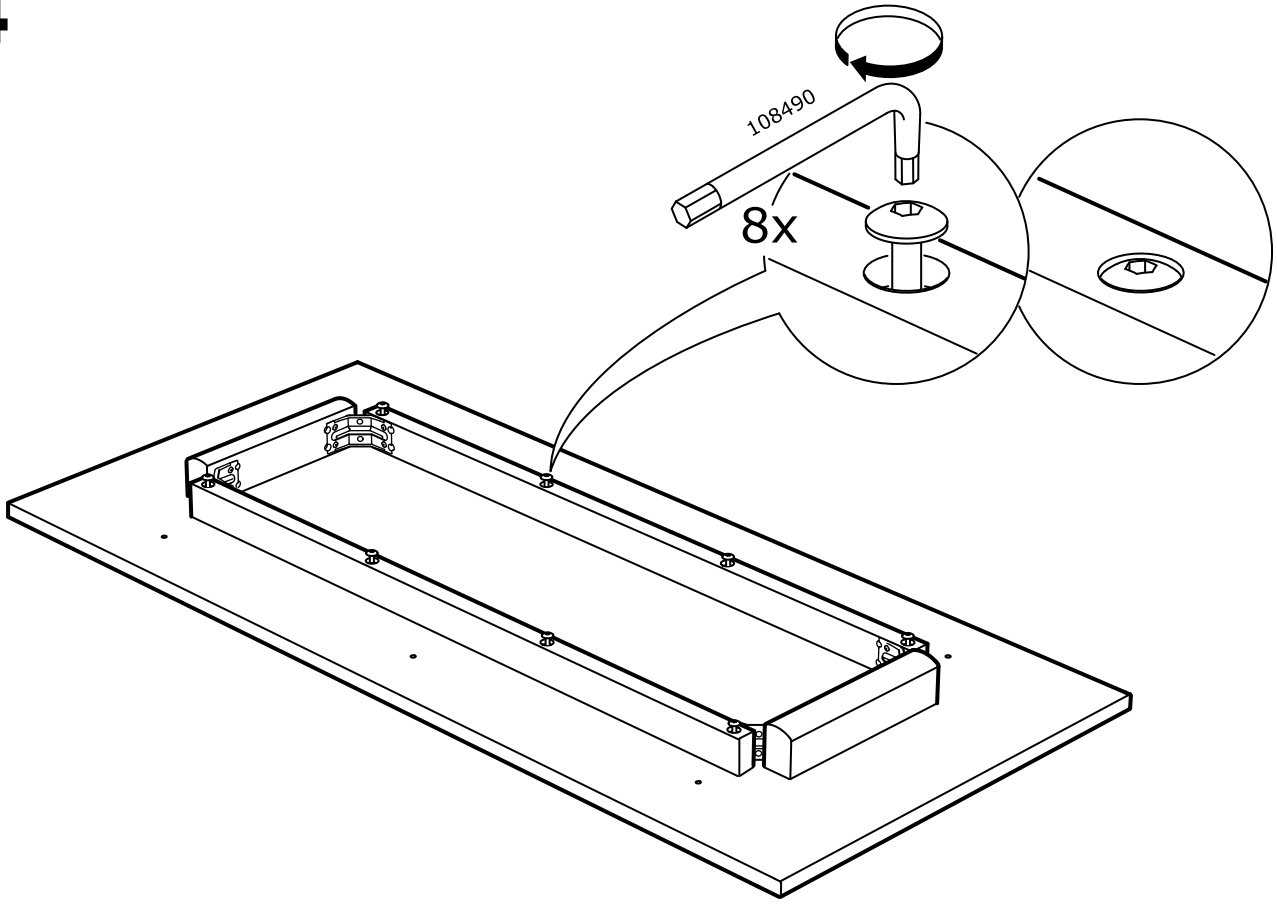

5

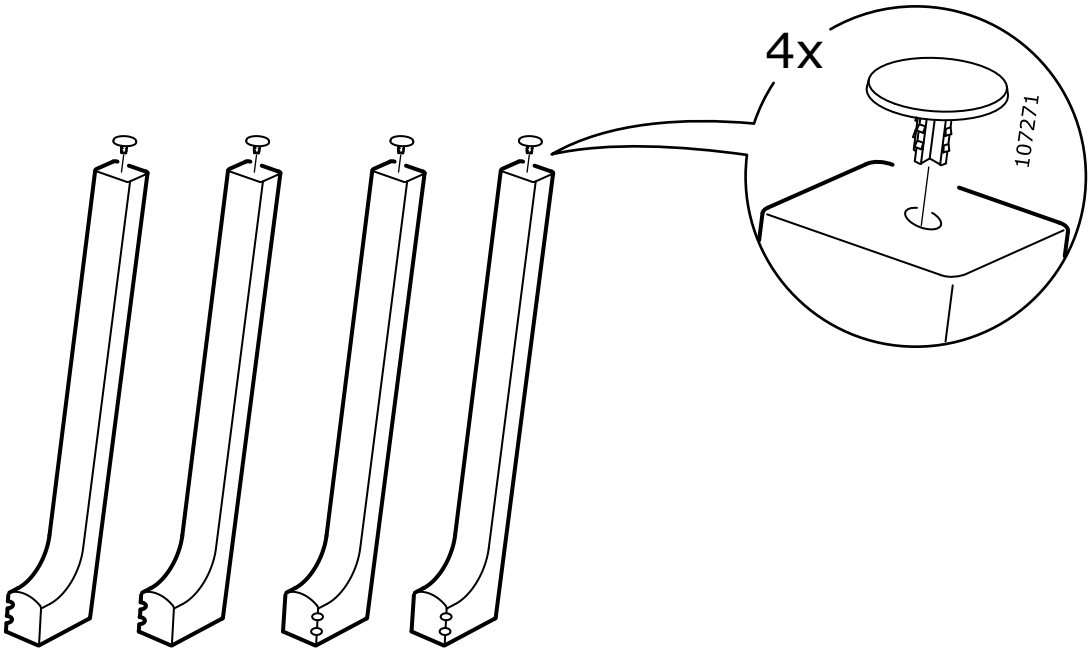

6

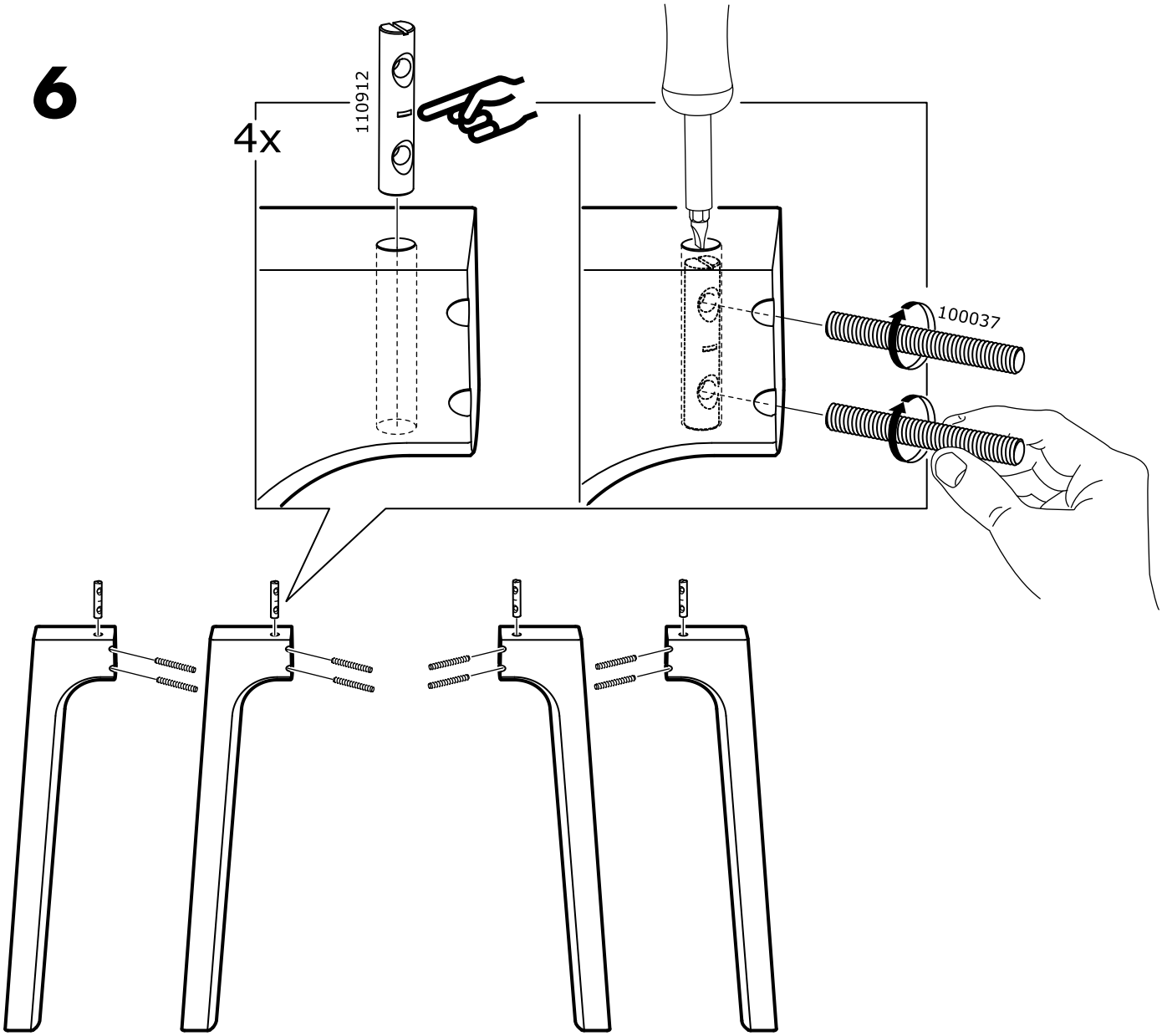

7

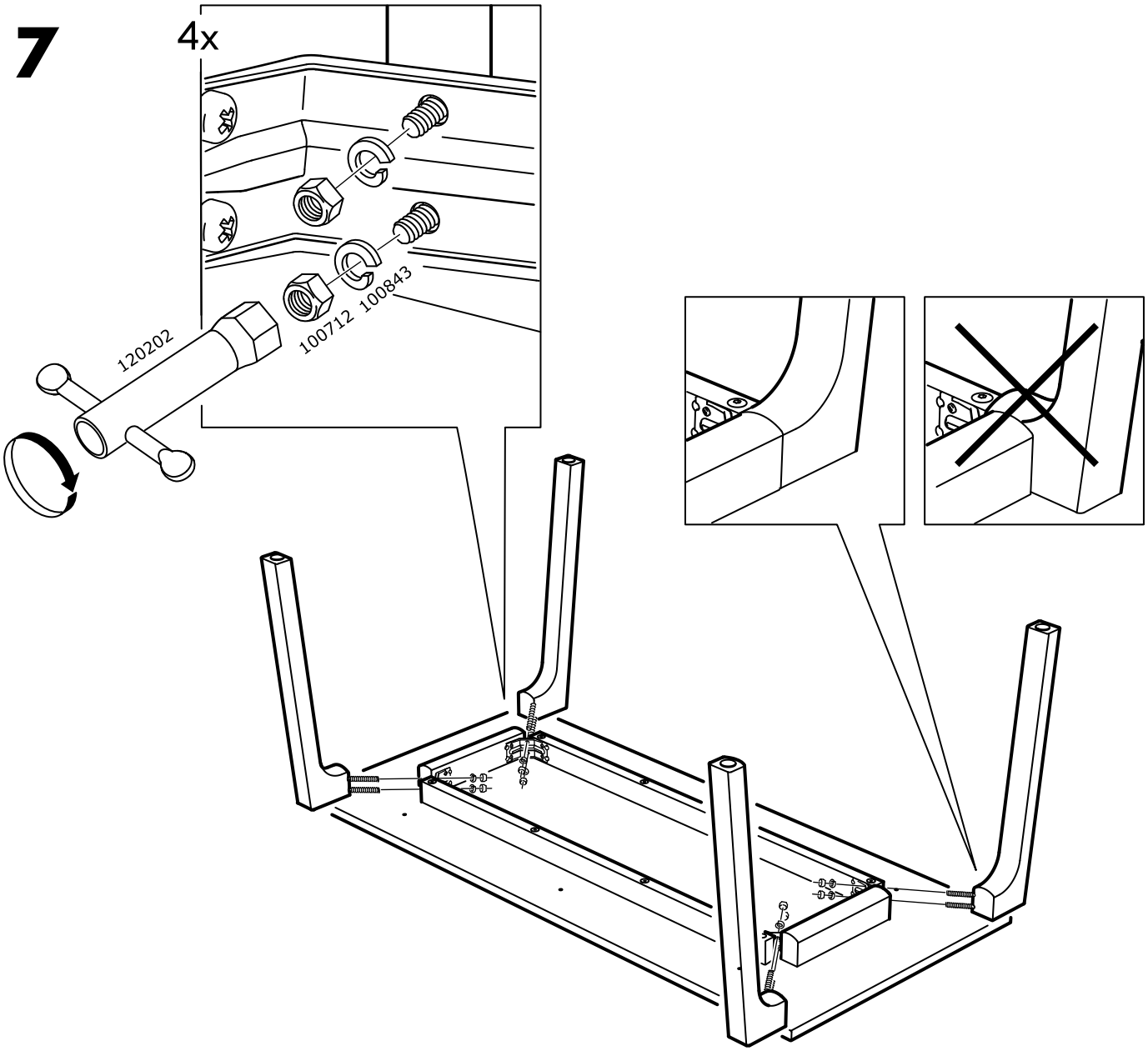

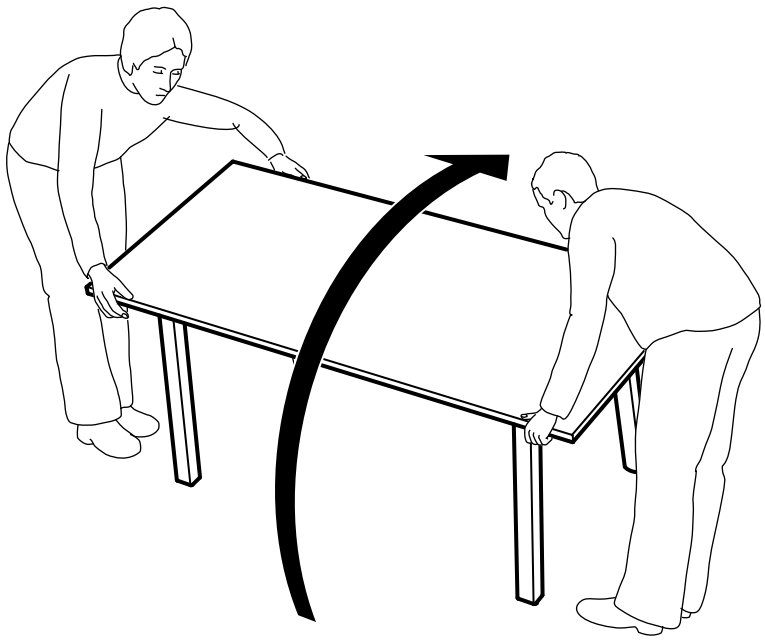

© Inter IKEA Systems B.V. 2014