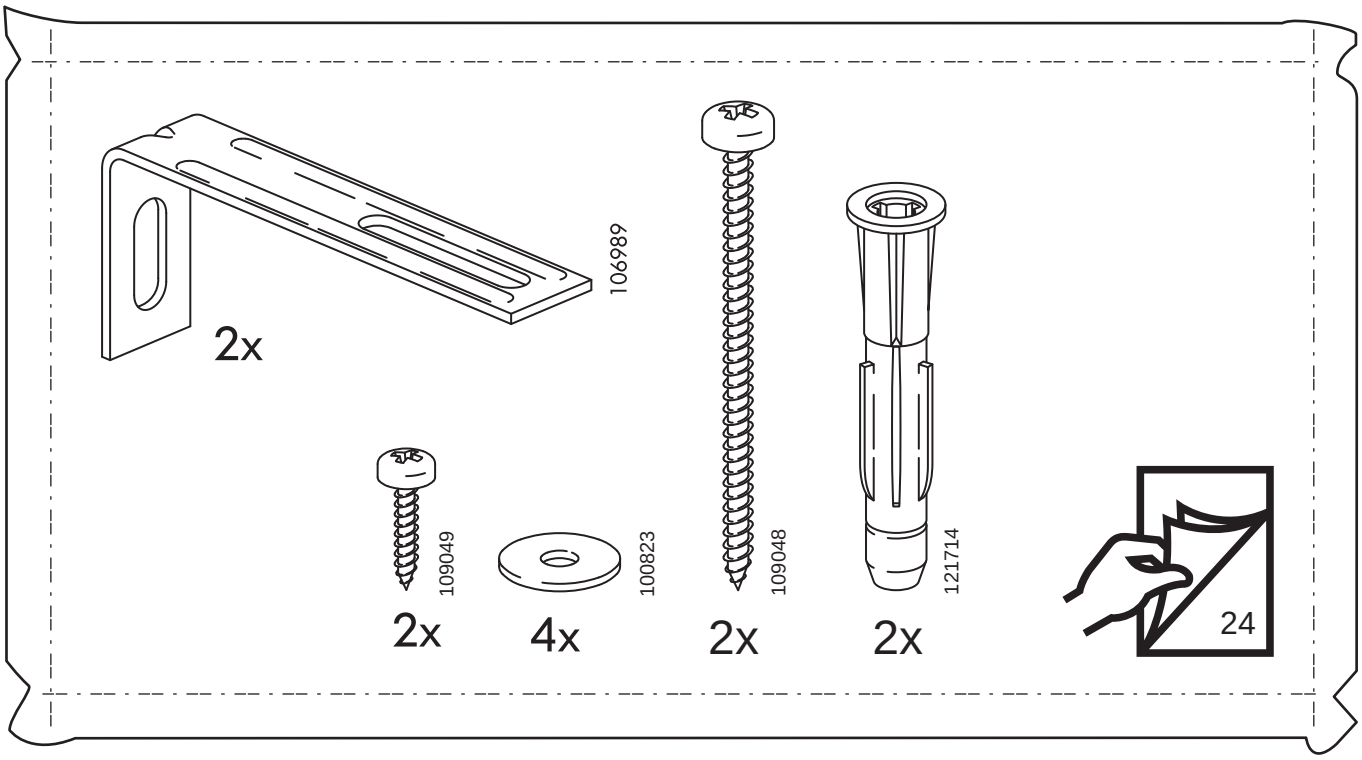
106989
2x
109049
2x
100823
4x
109048
2x
121714
2x
24
326949

1

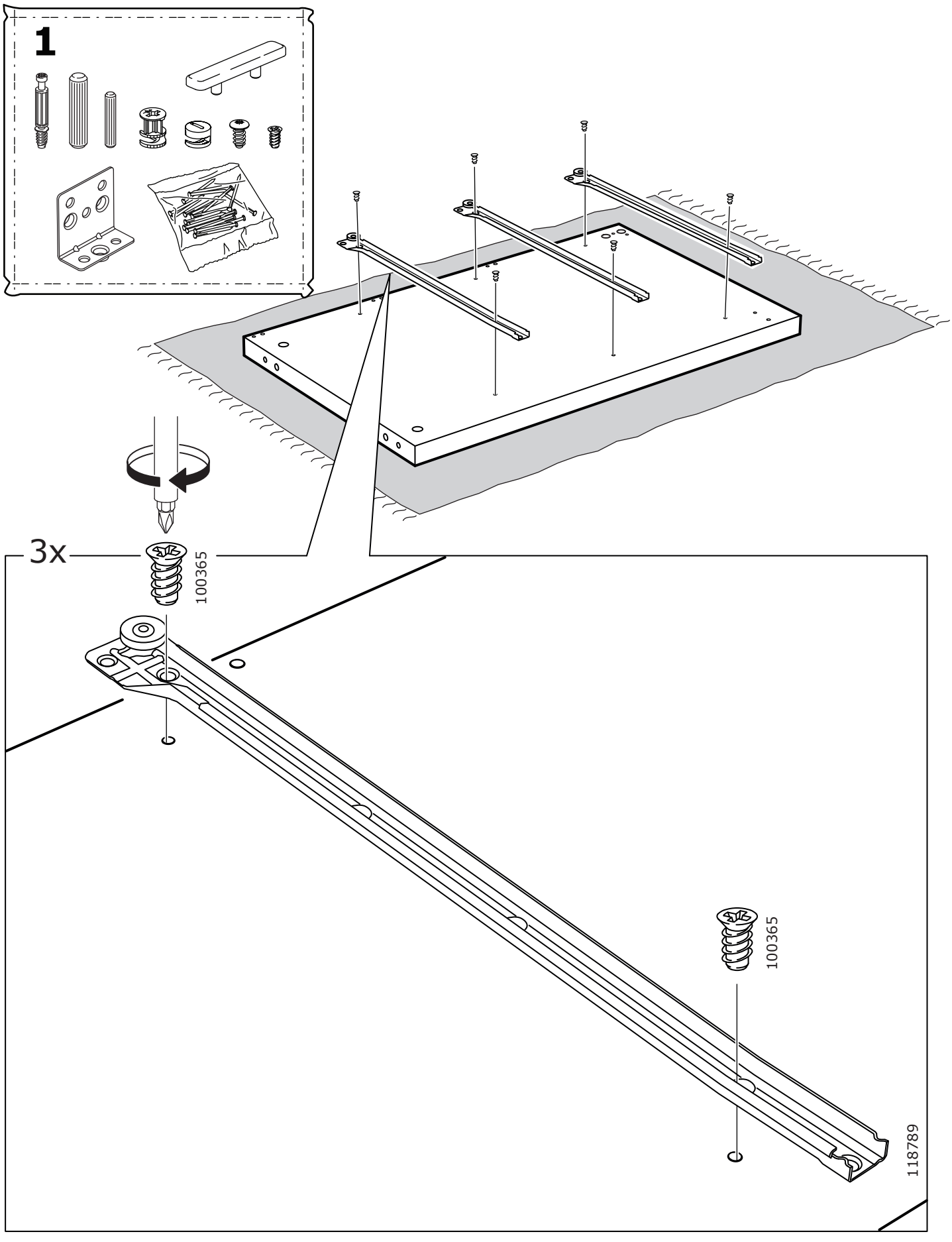

2

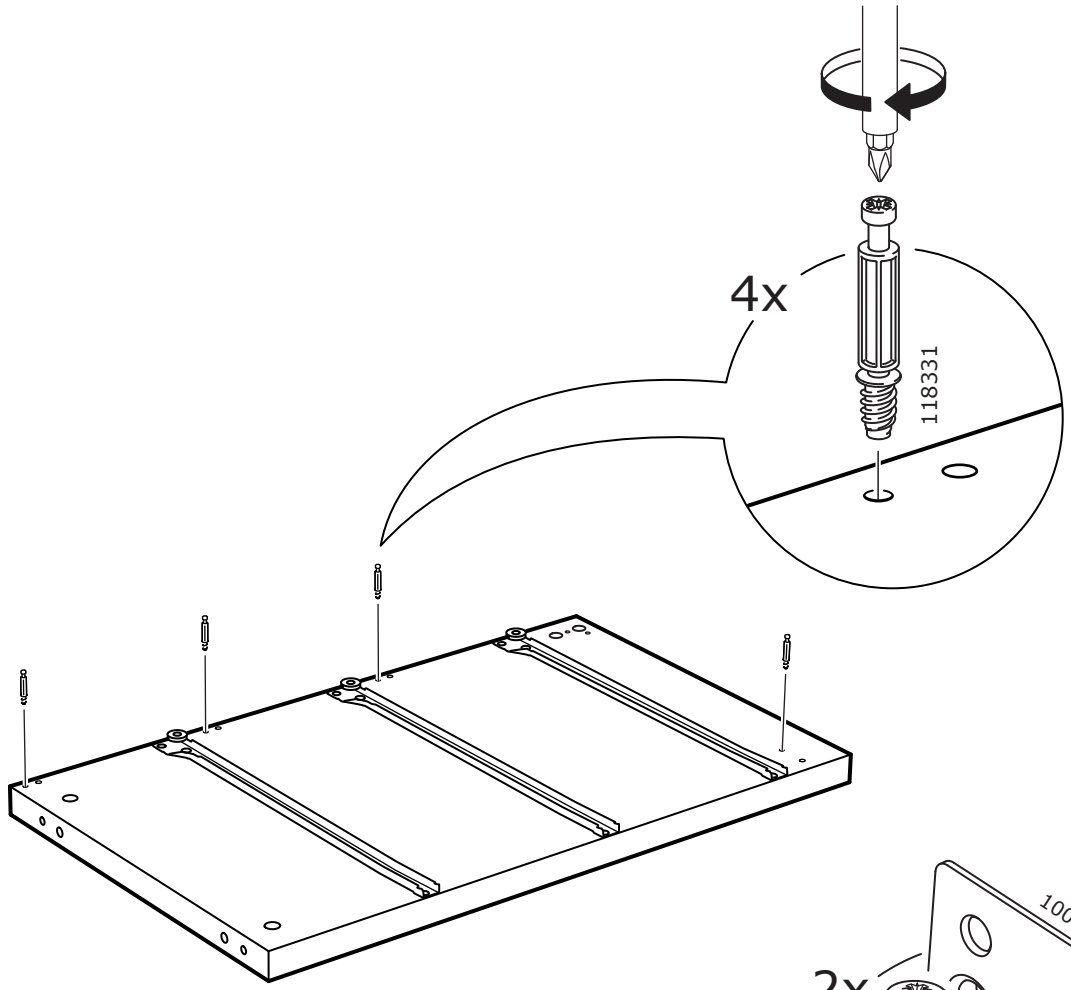

3

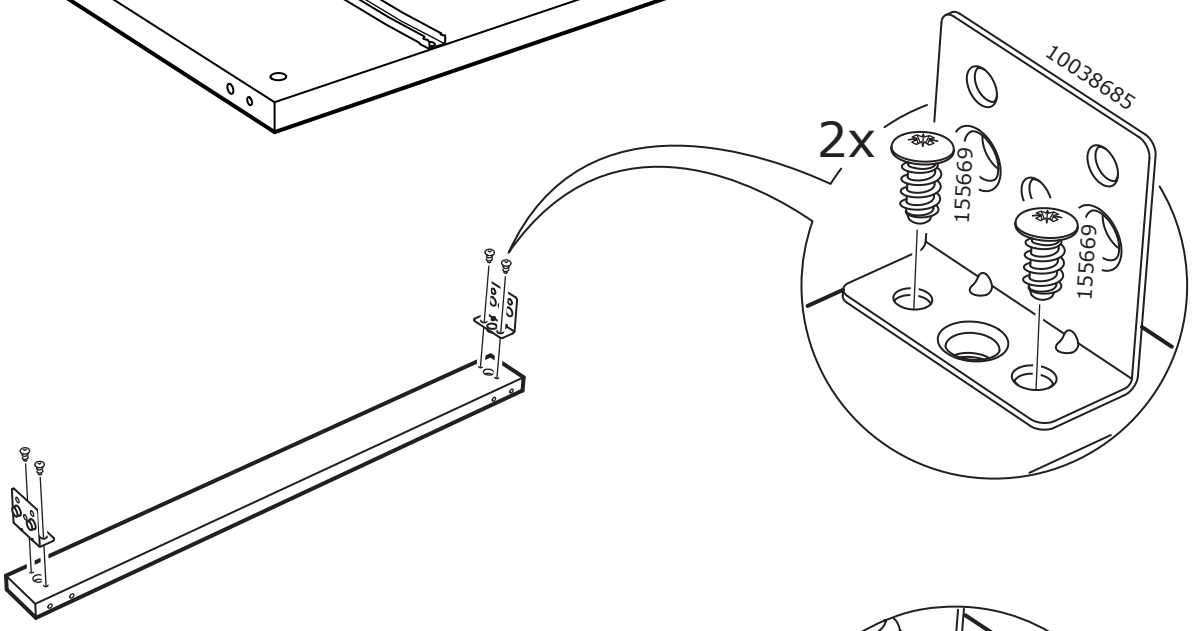

4

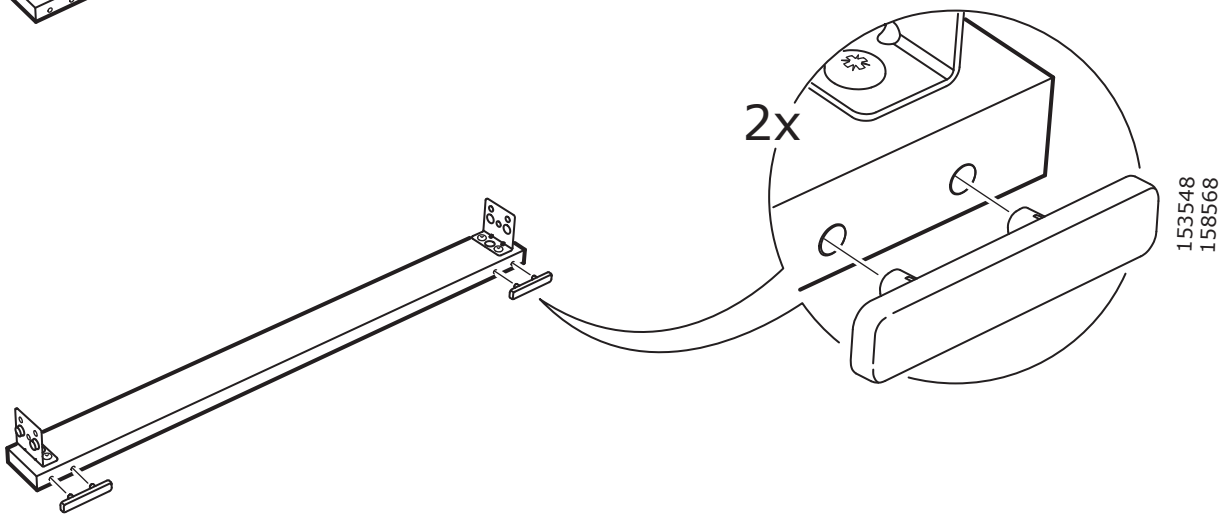

5

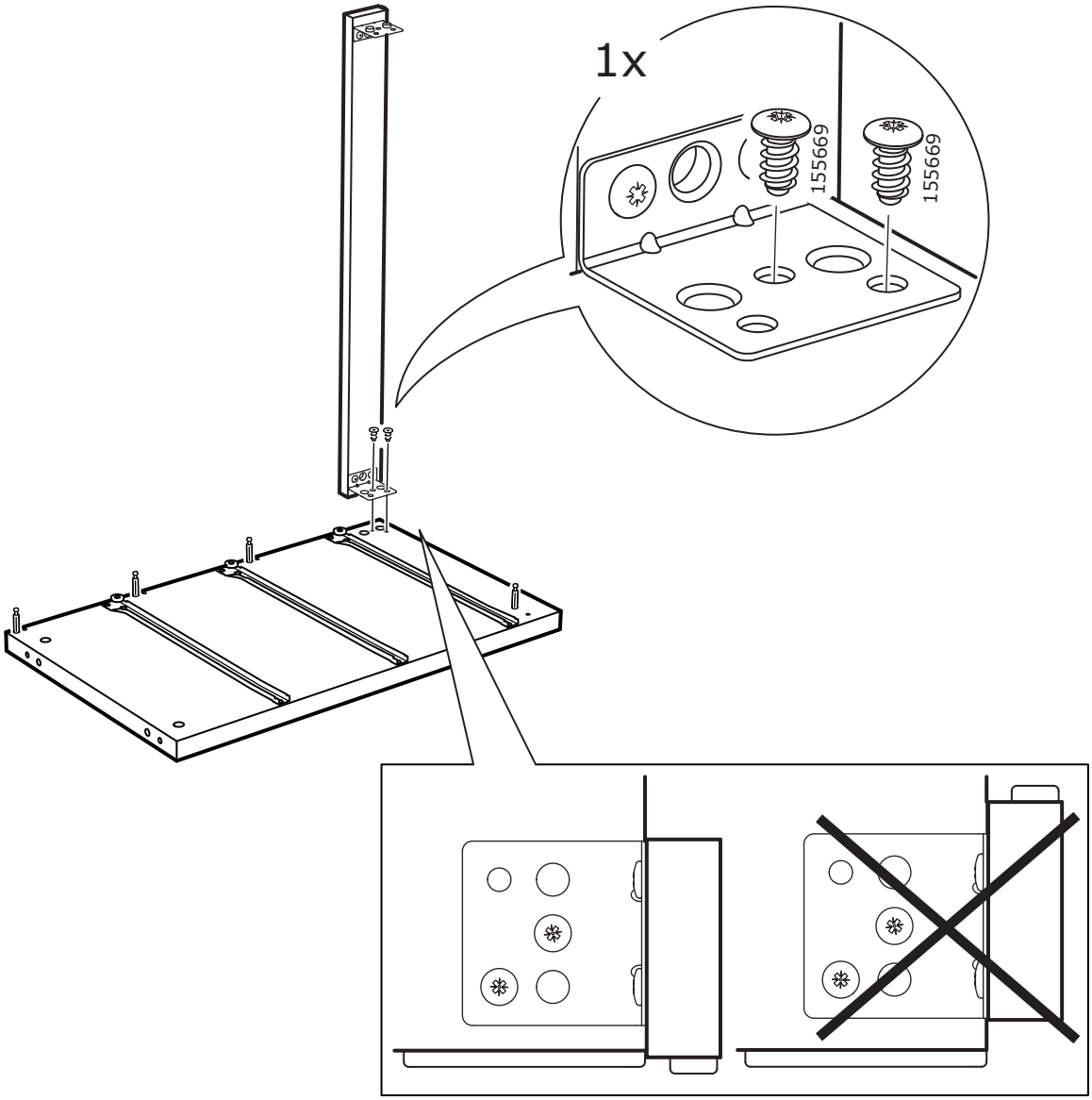

6

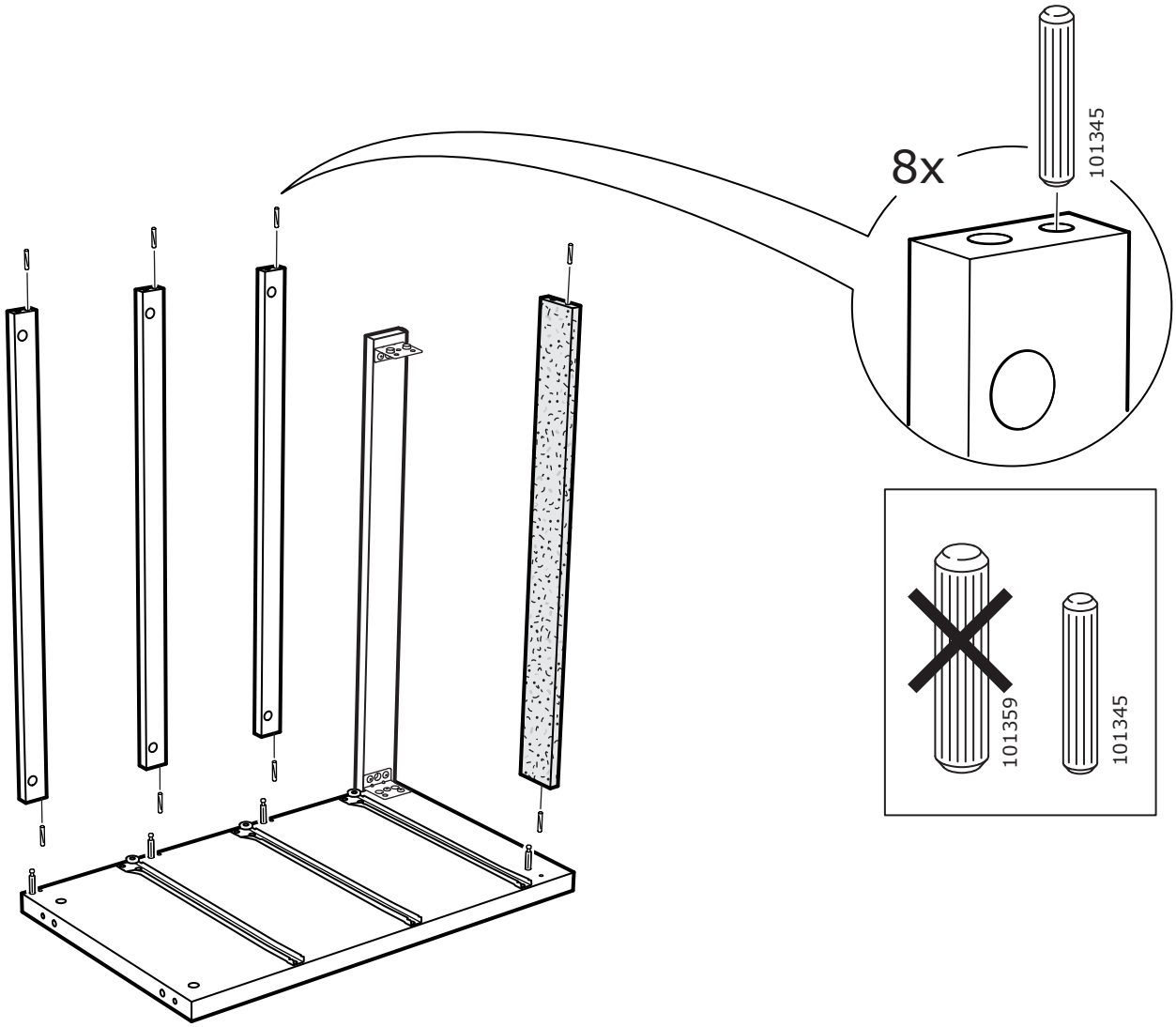

7

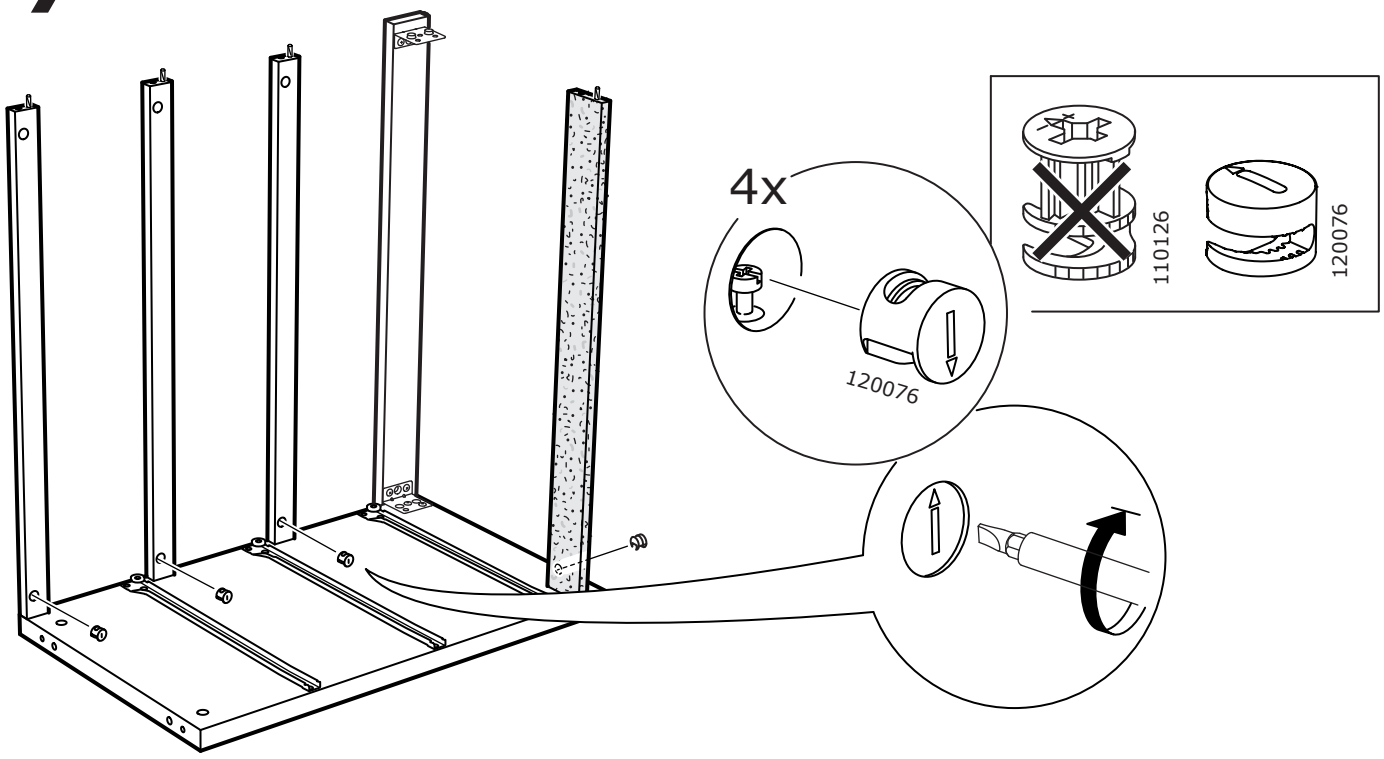

8

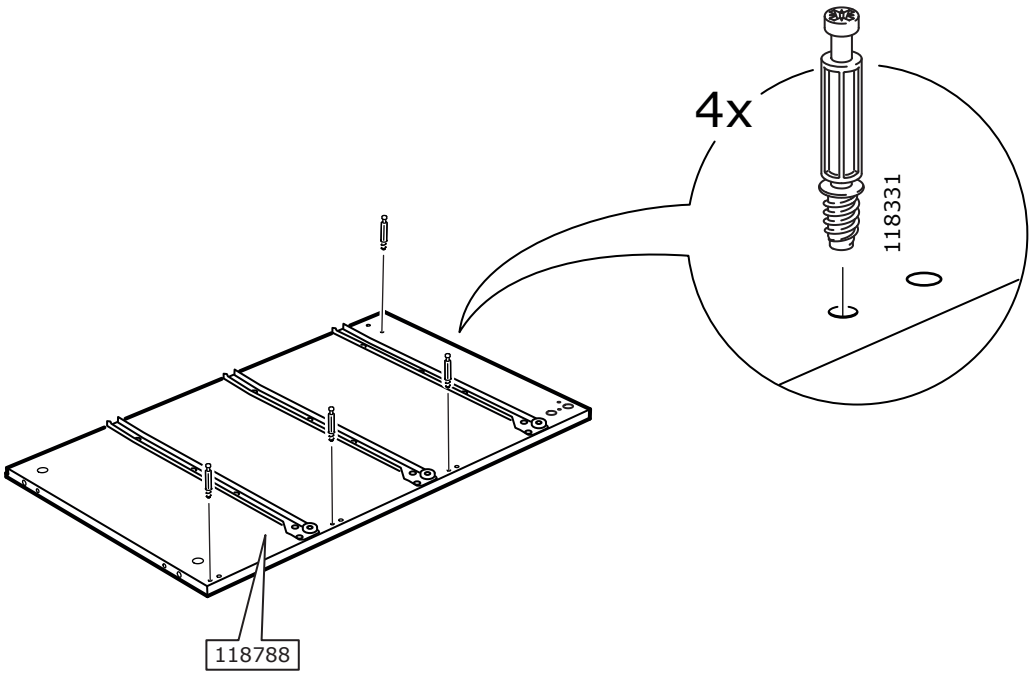

9

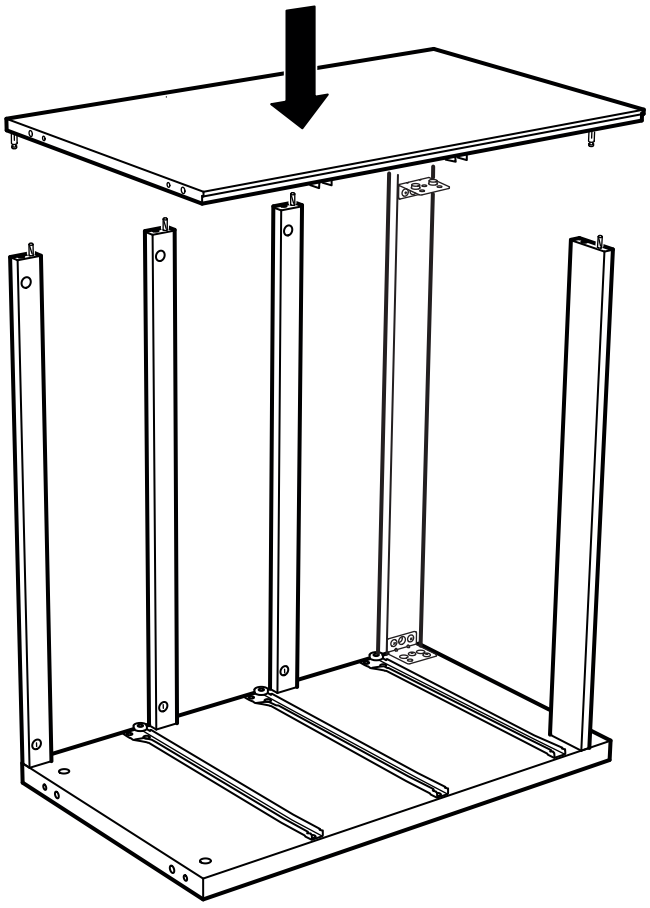

10

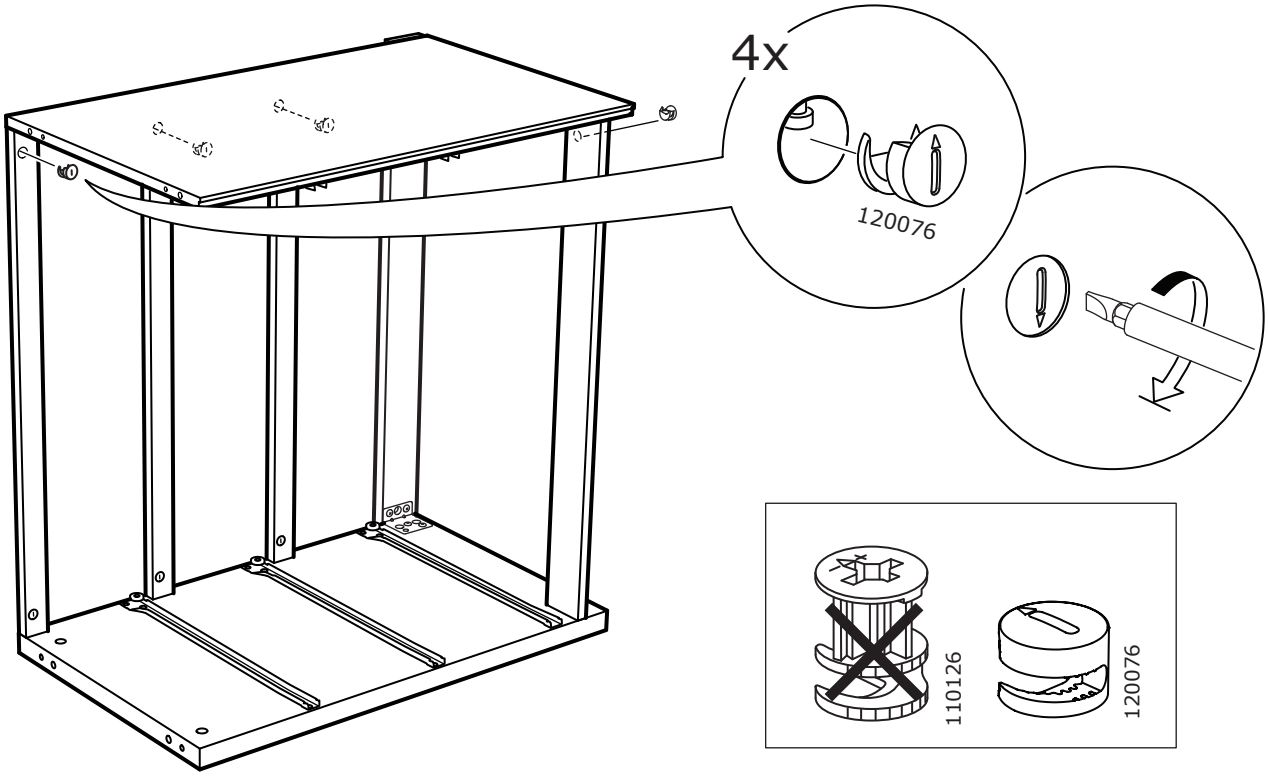

11

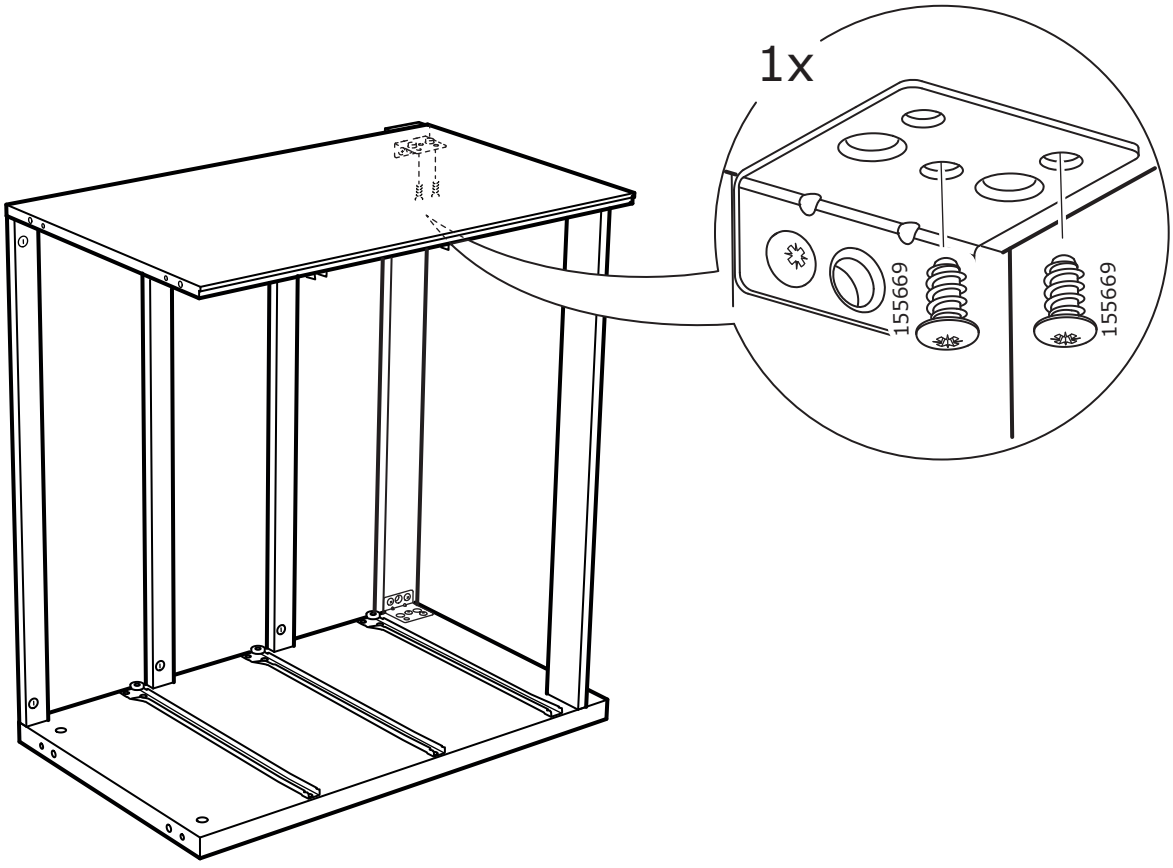

12

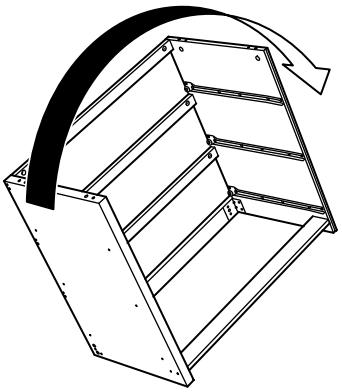

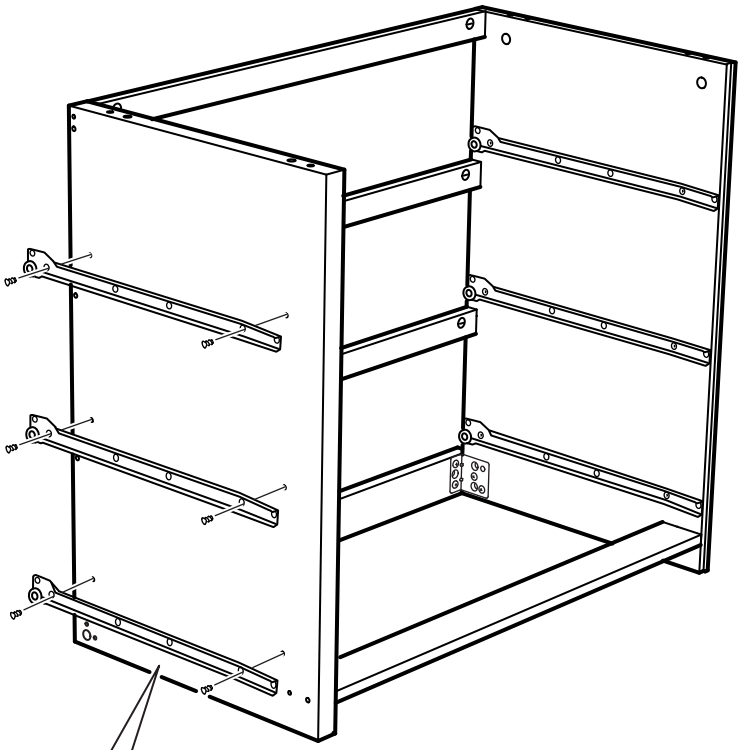

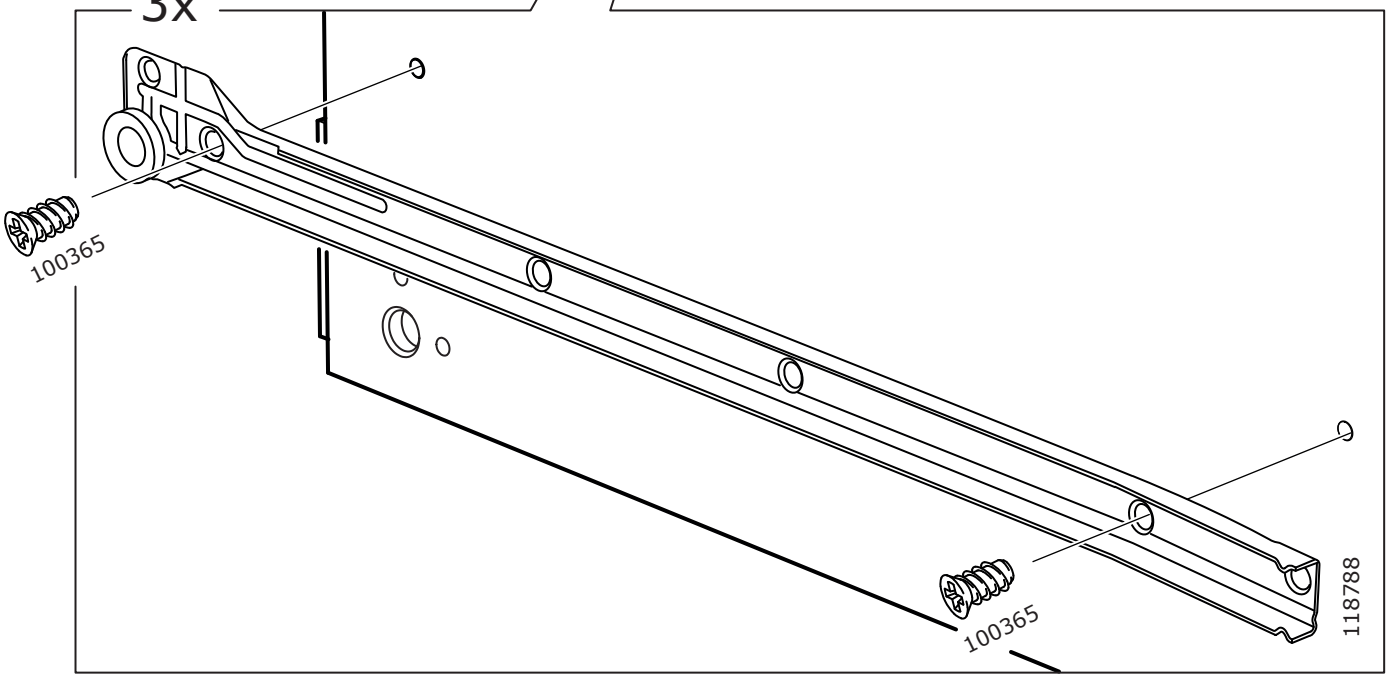

13

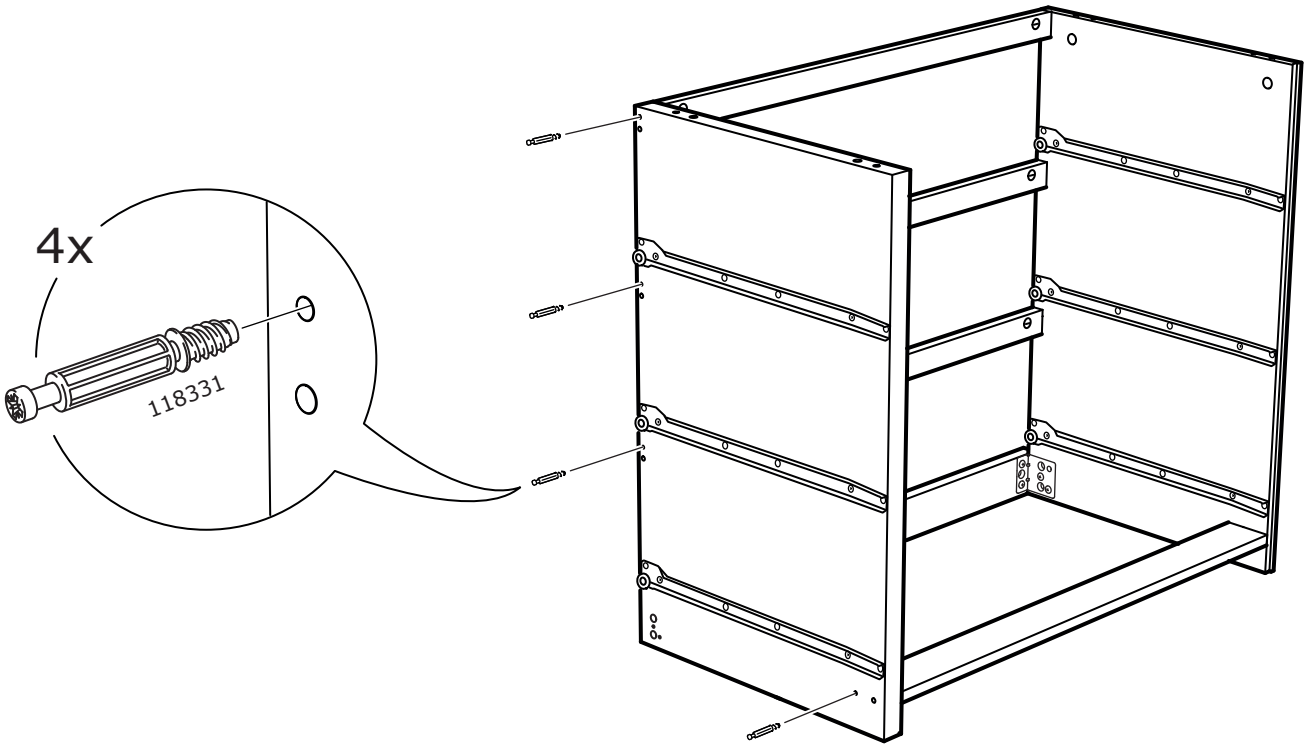

14

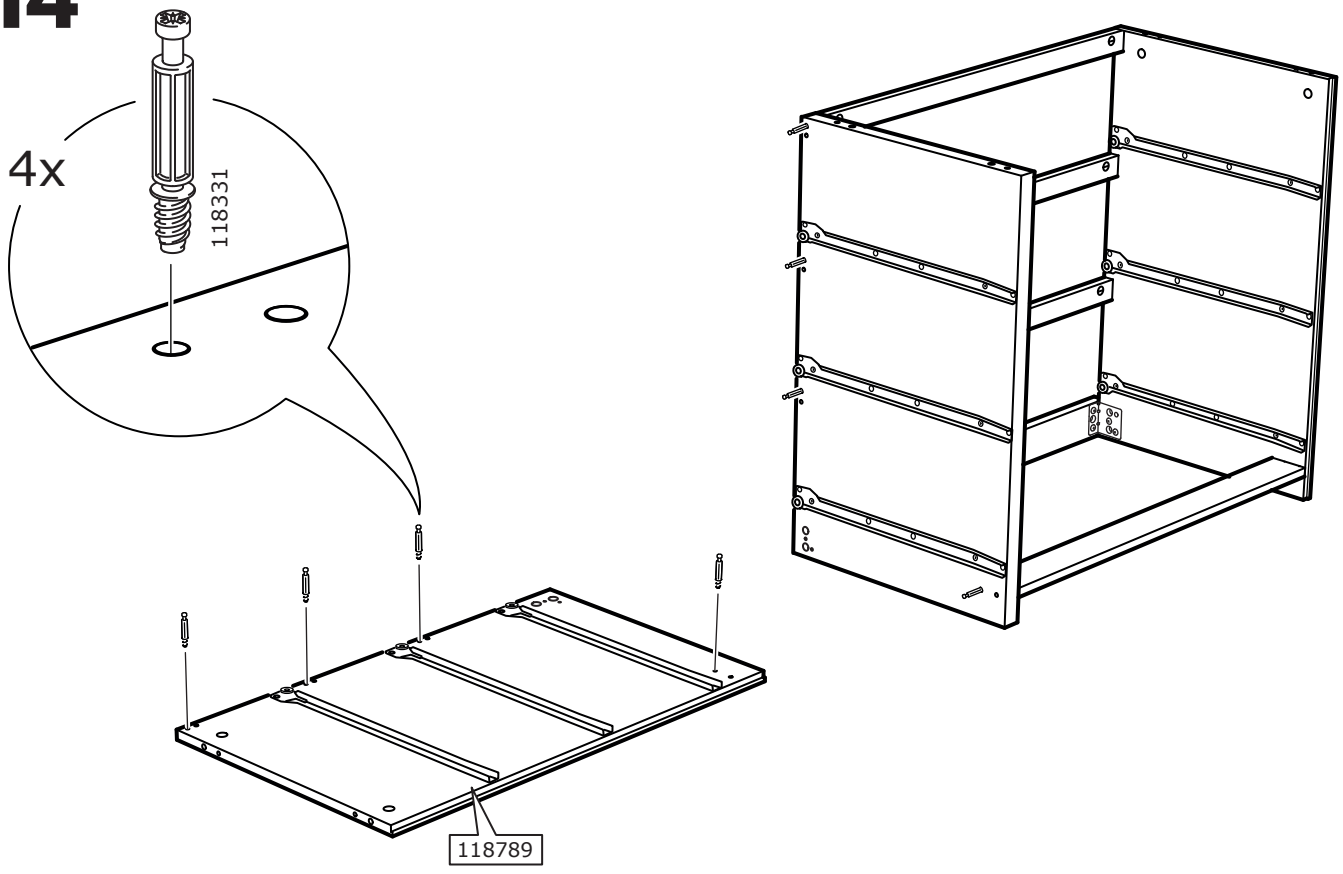

15

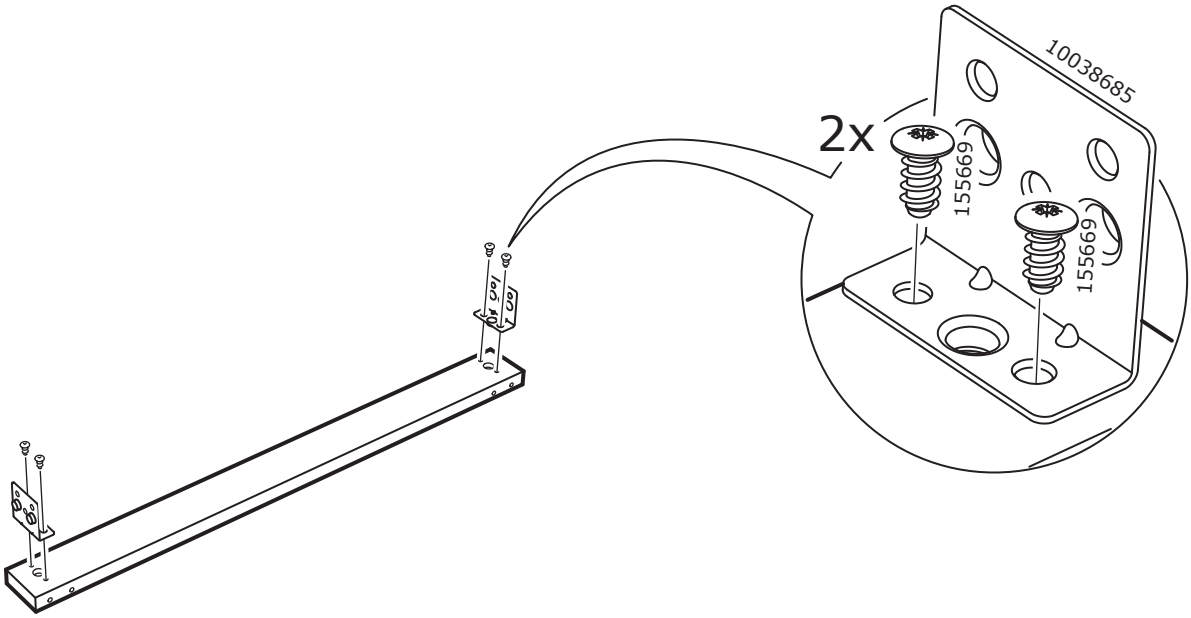

16

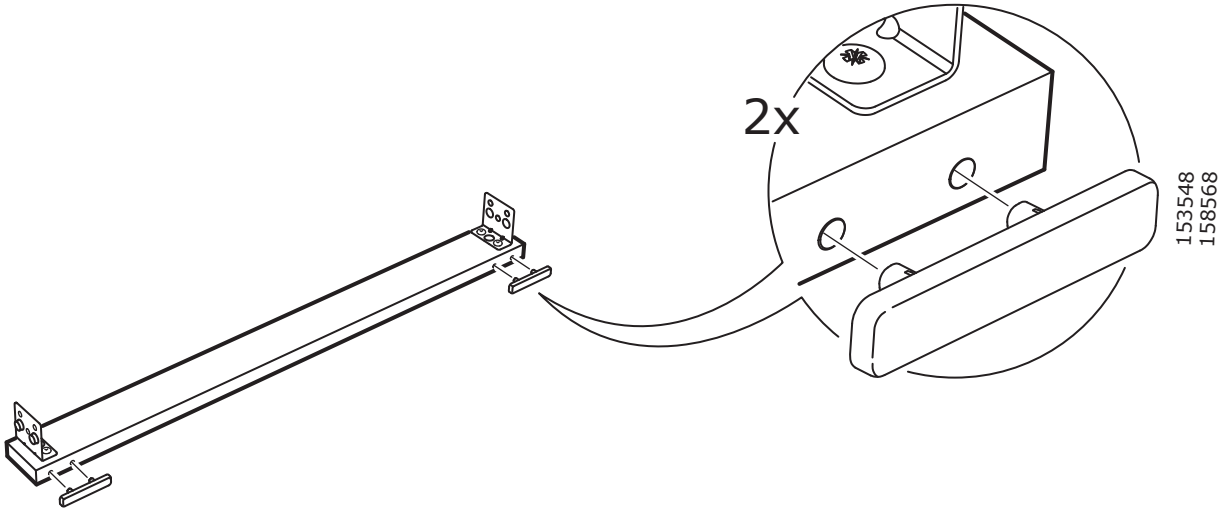

17

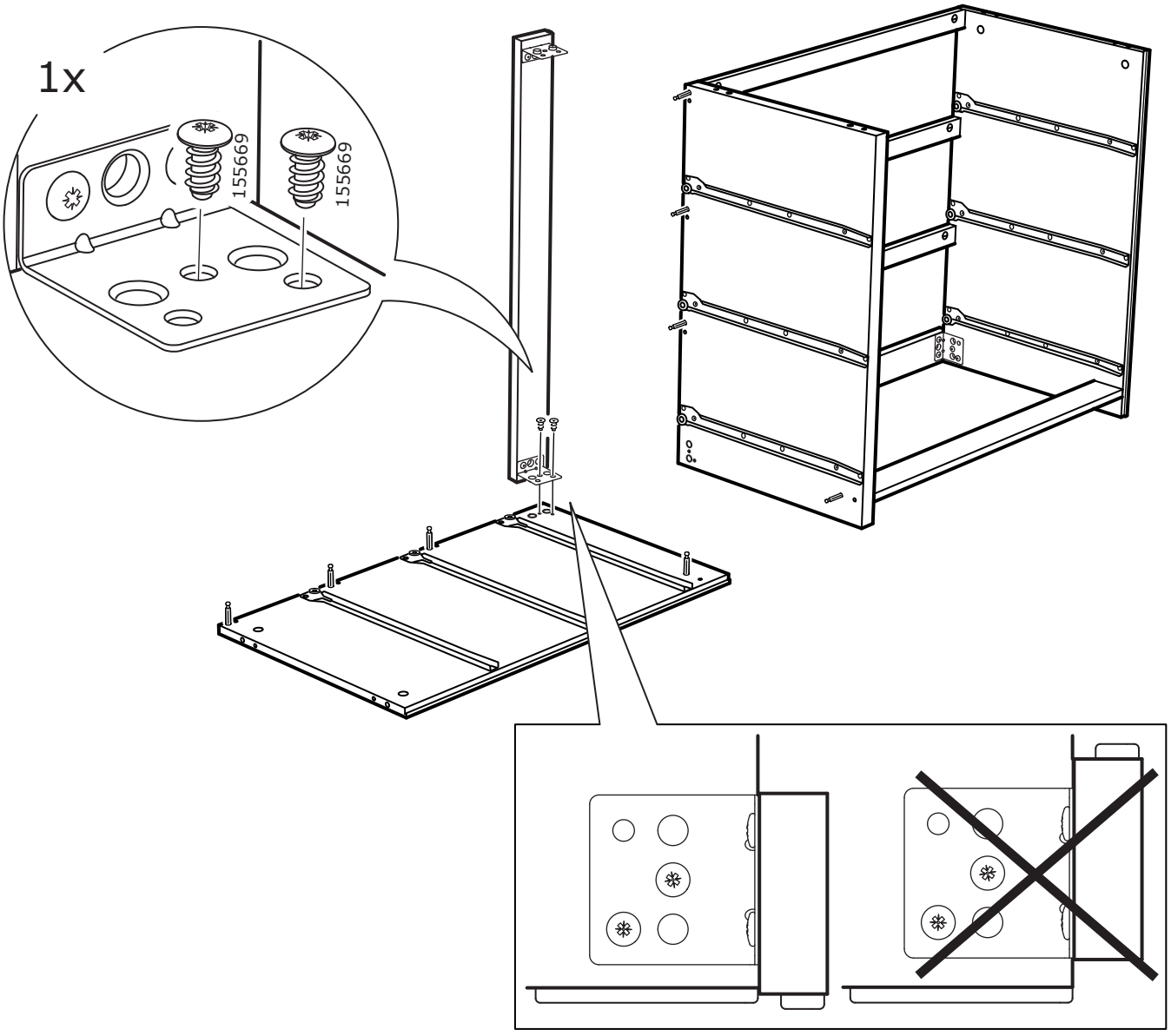

18

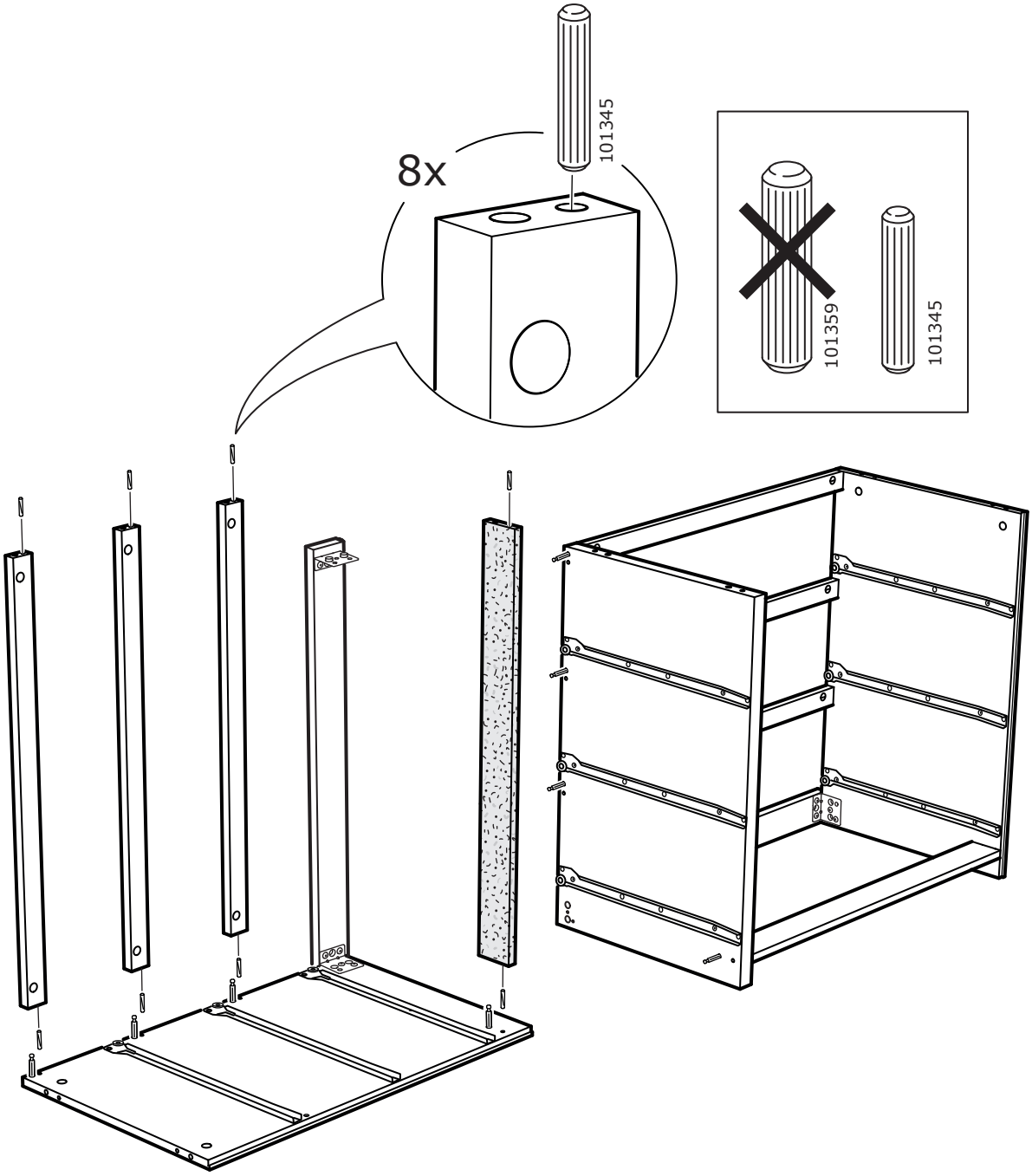

19

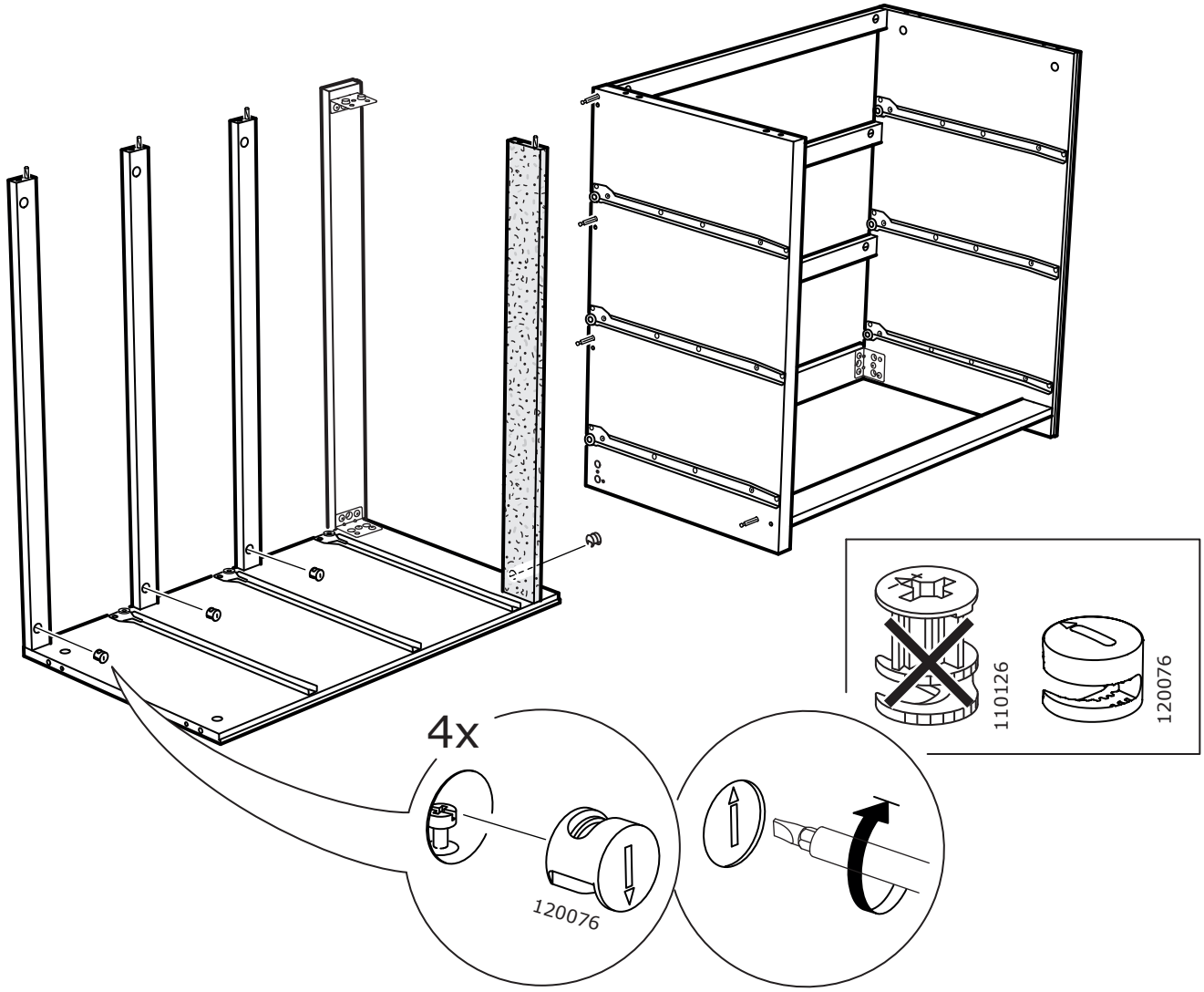

20

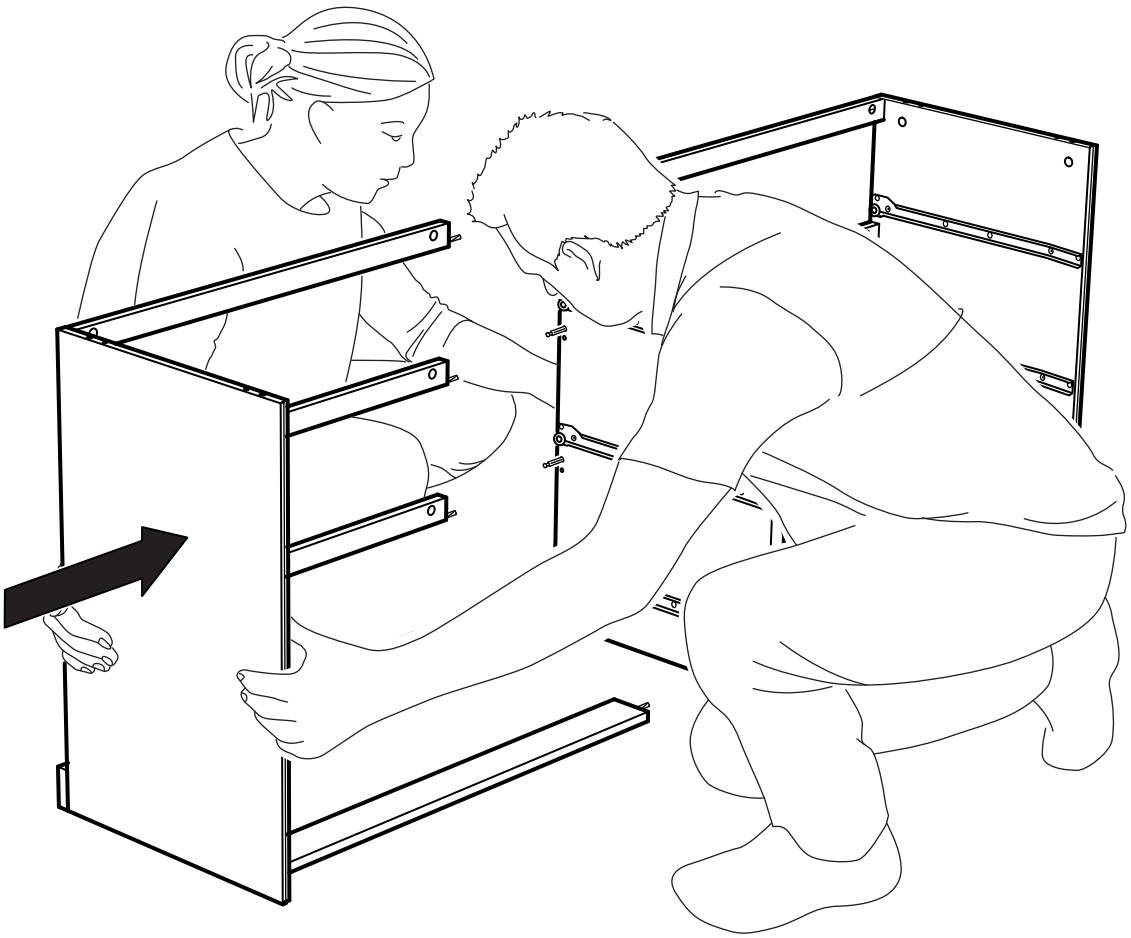

21

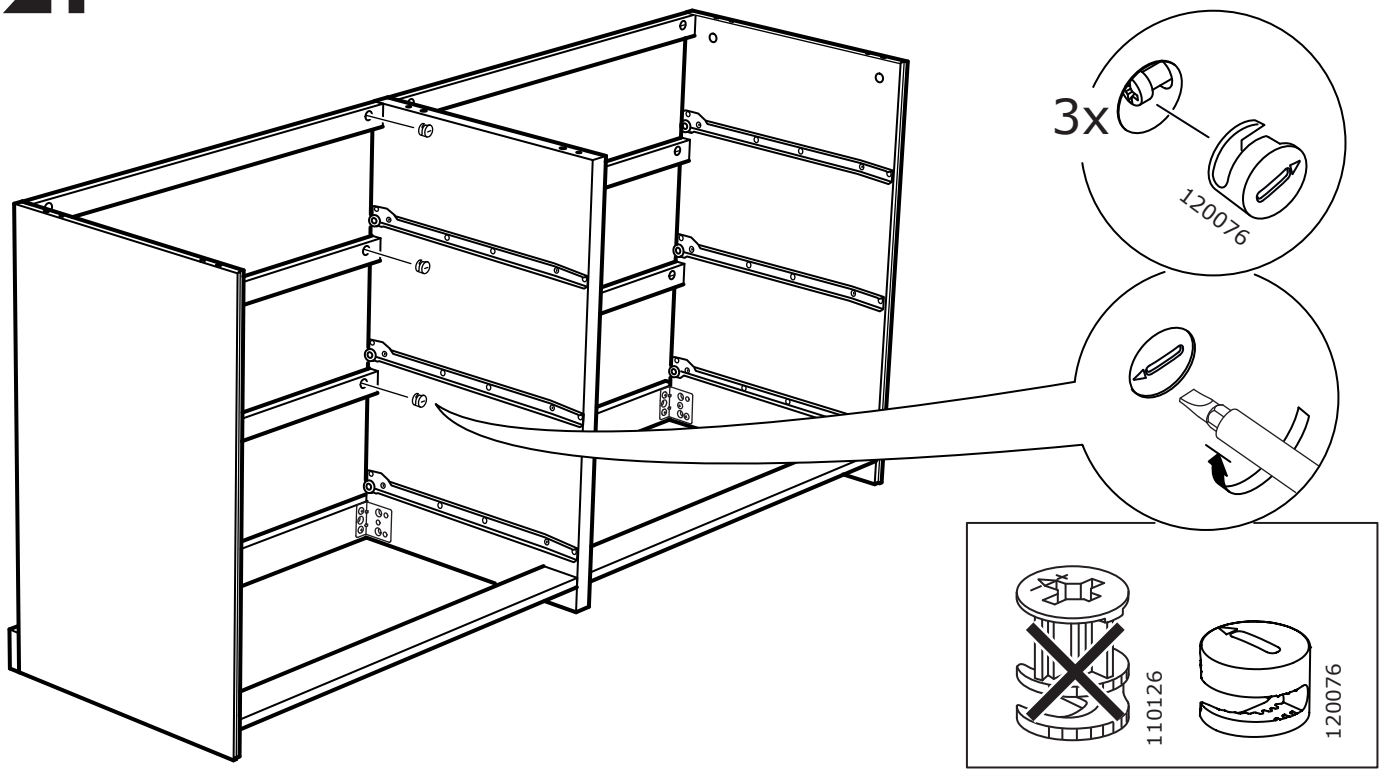

22

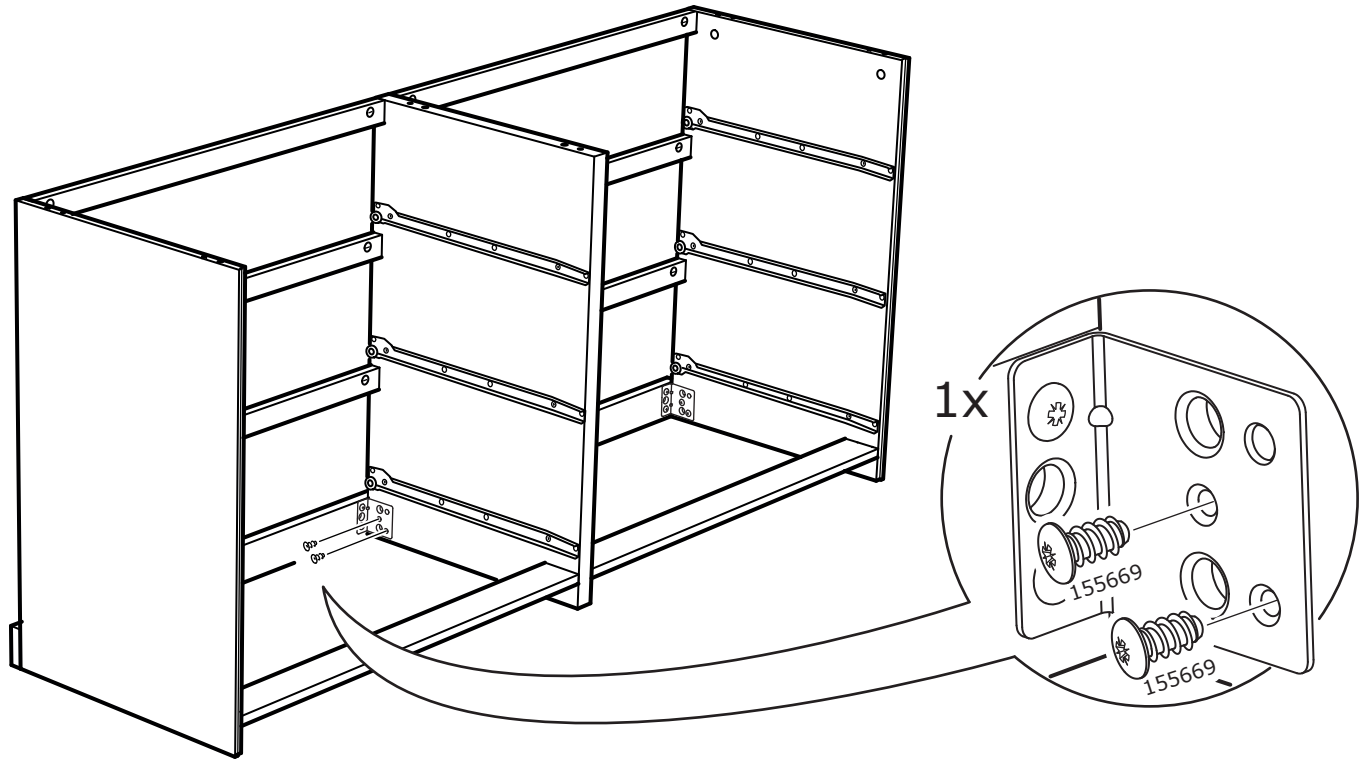

23

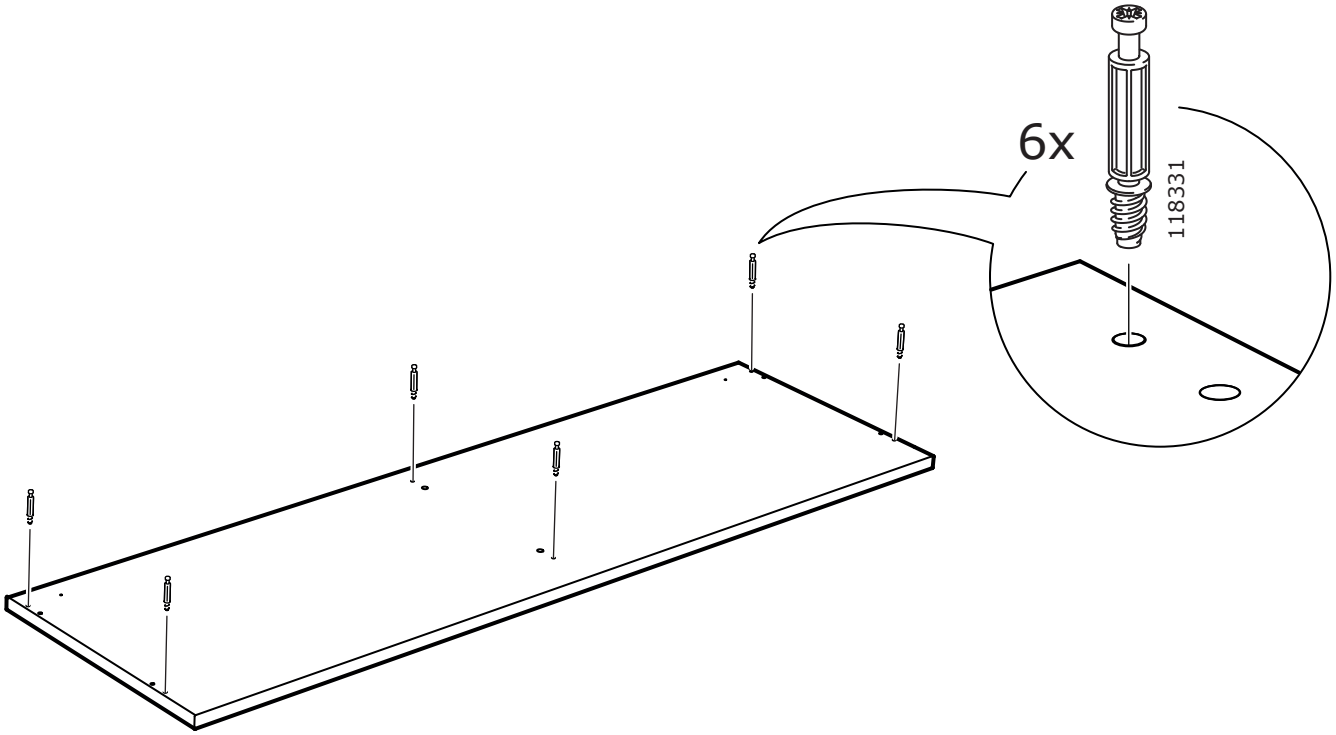

24

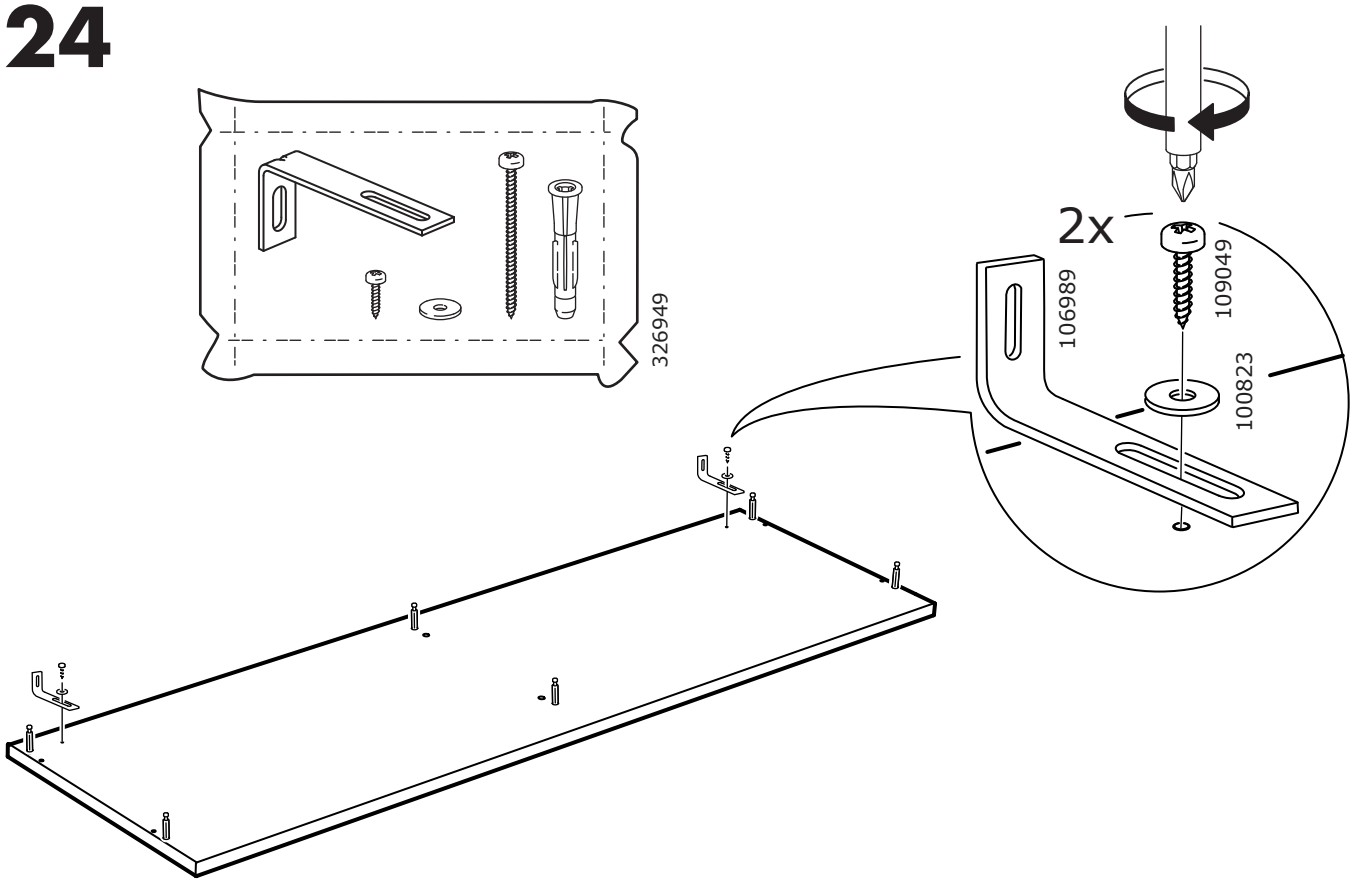

25

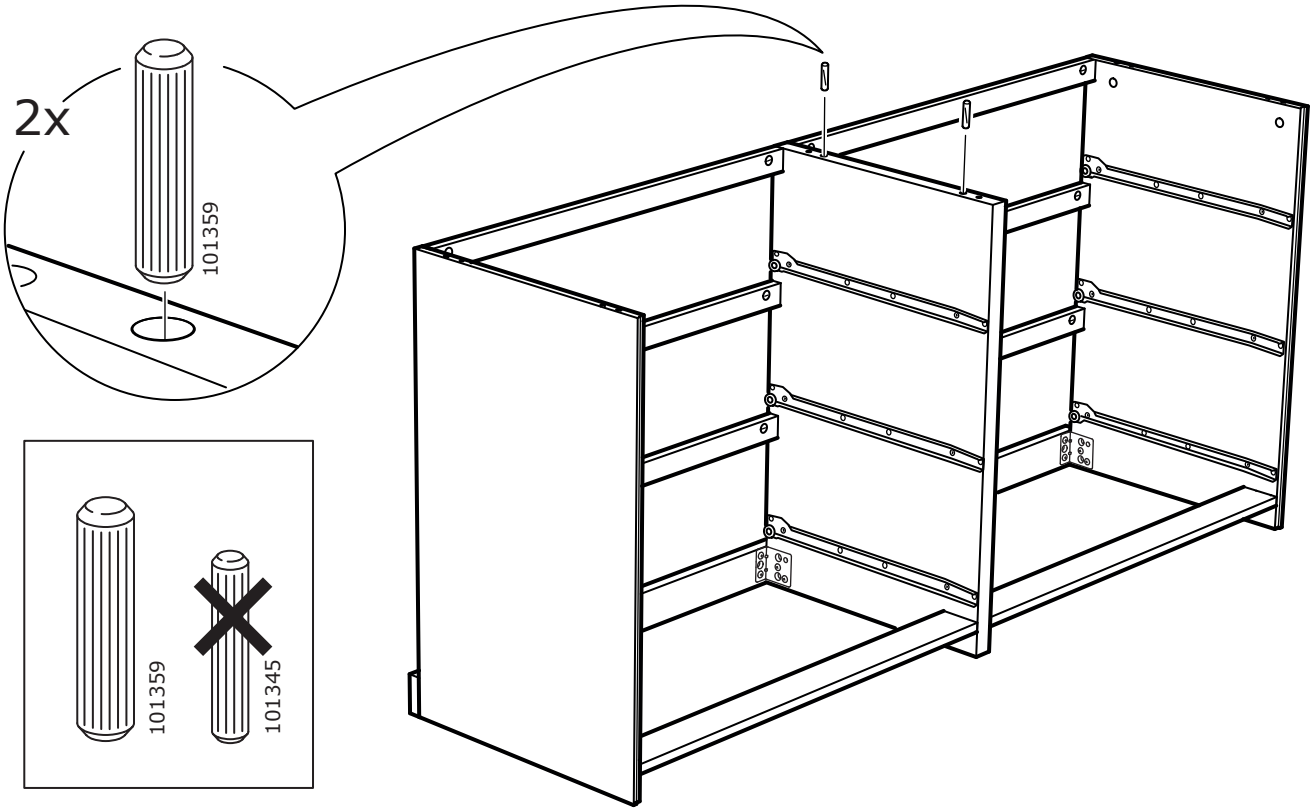

26

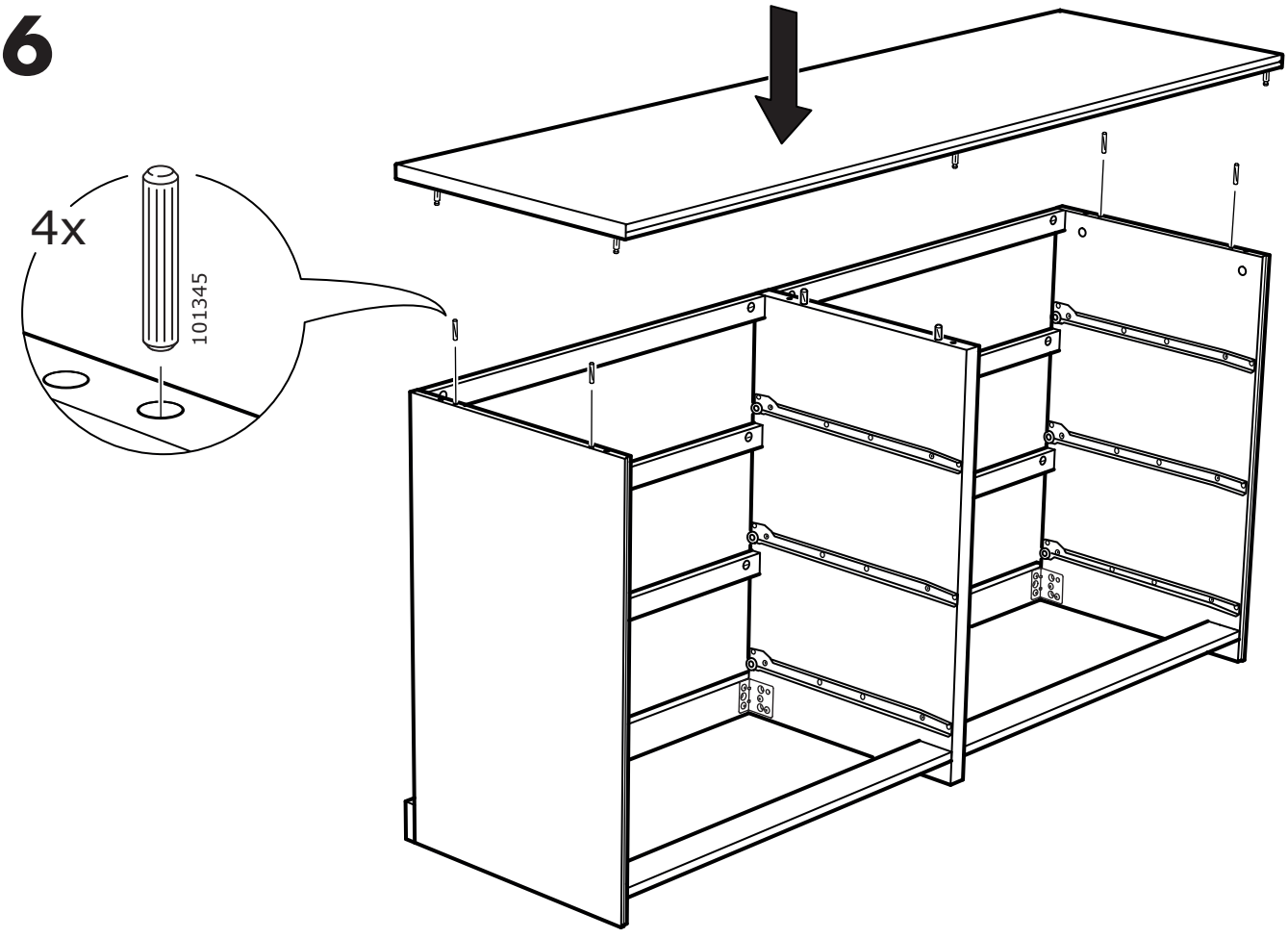

27

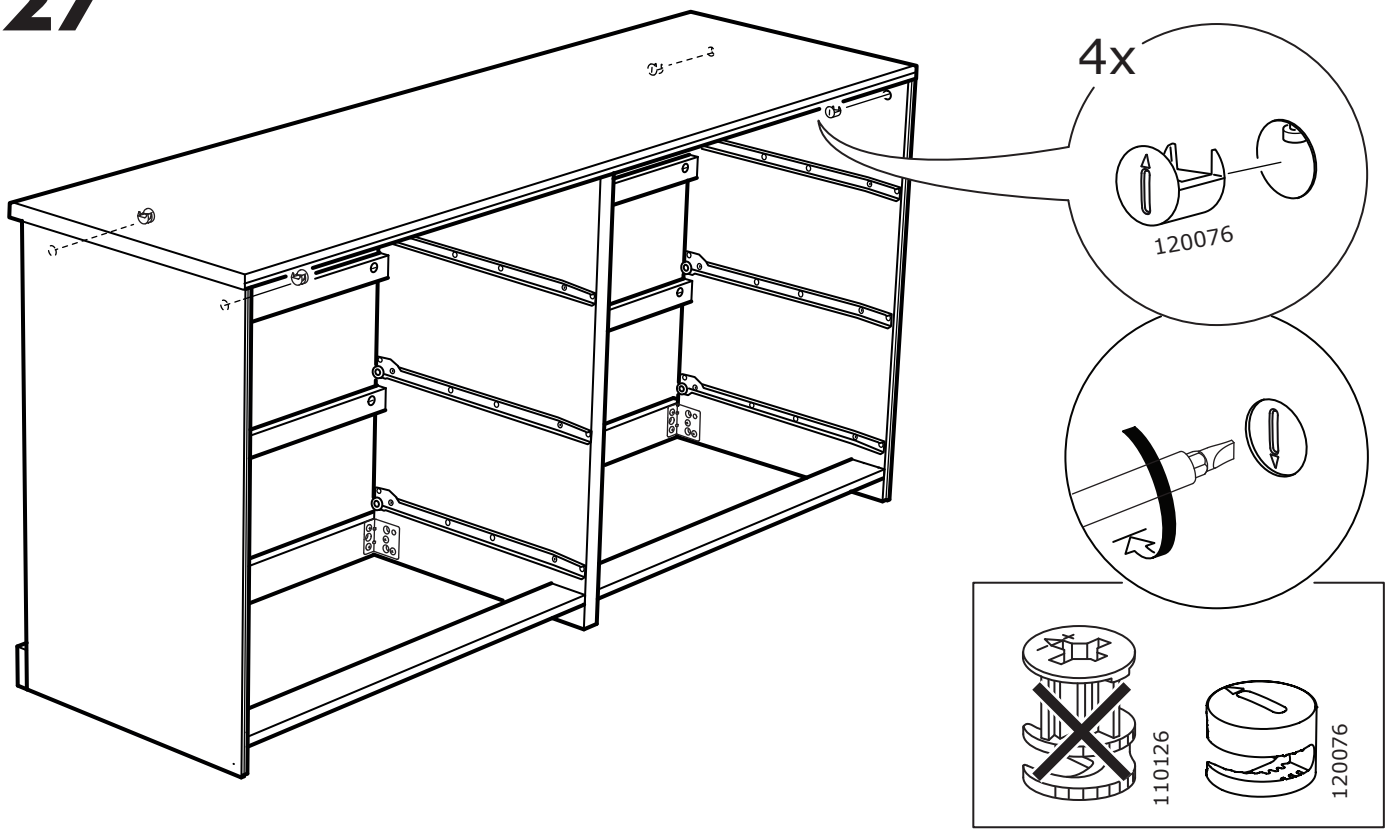

28

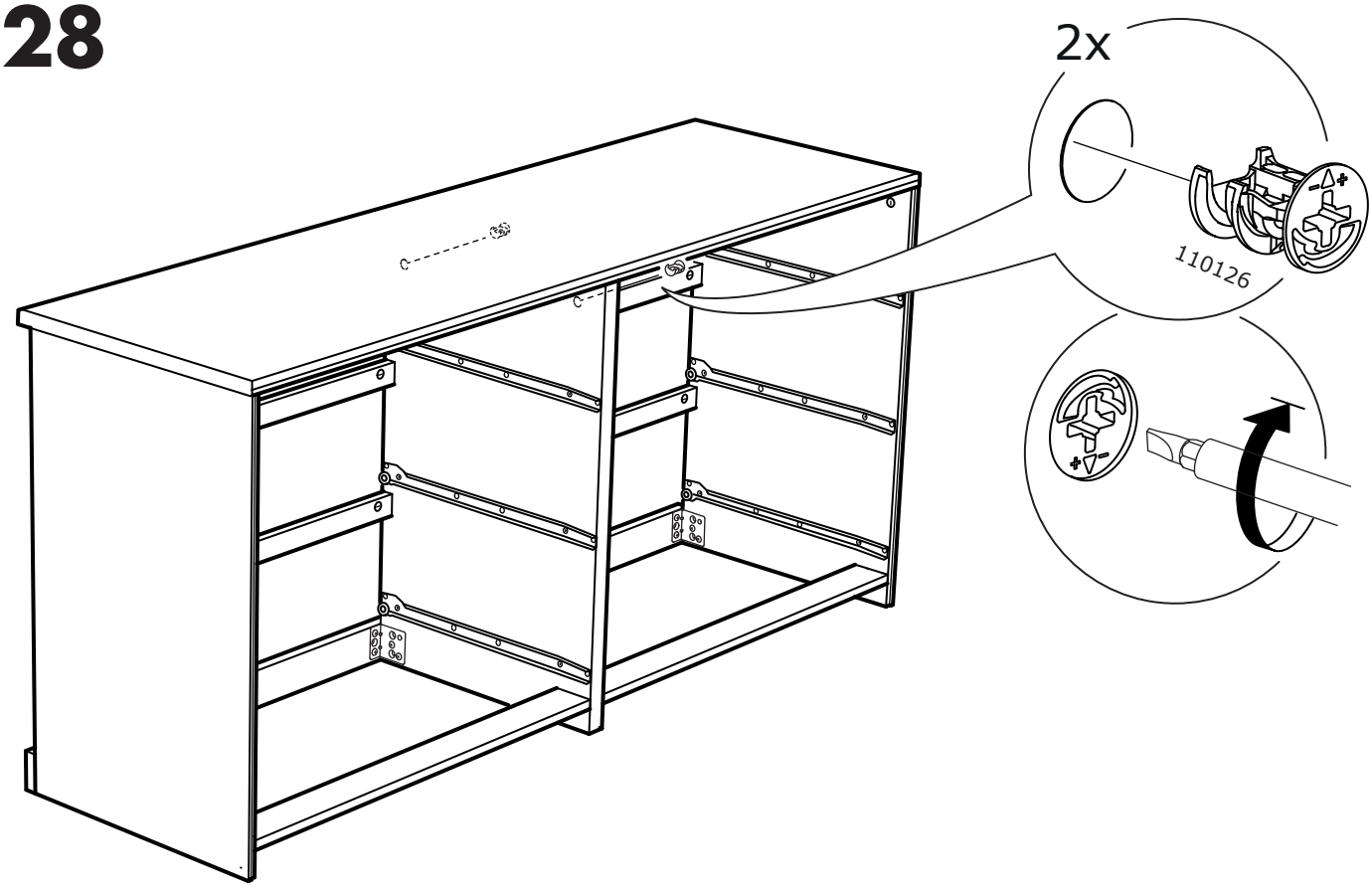

29

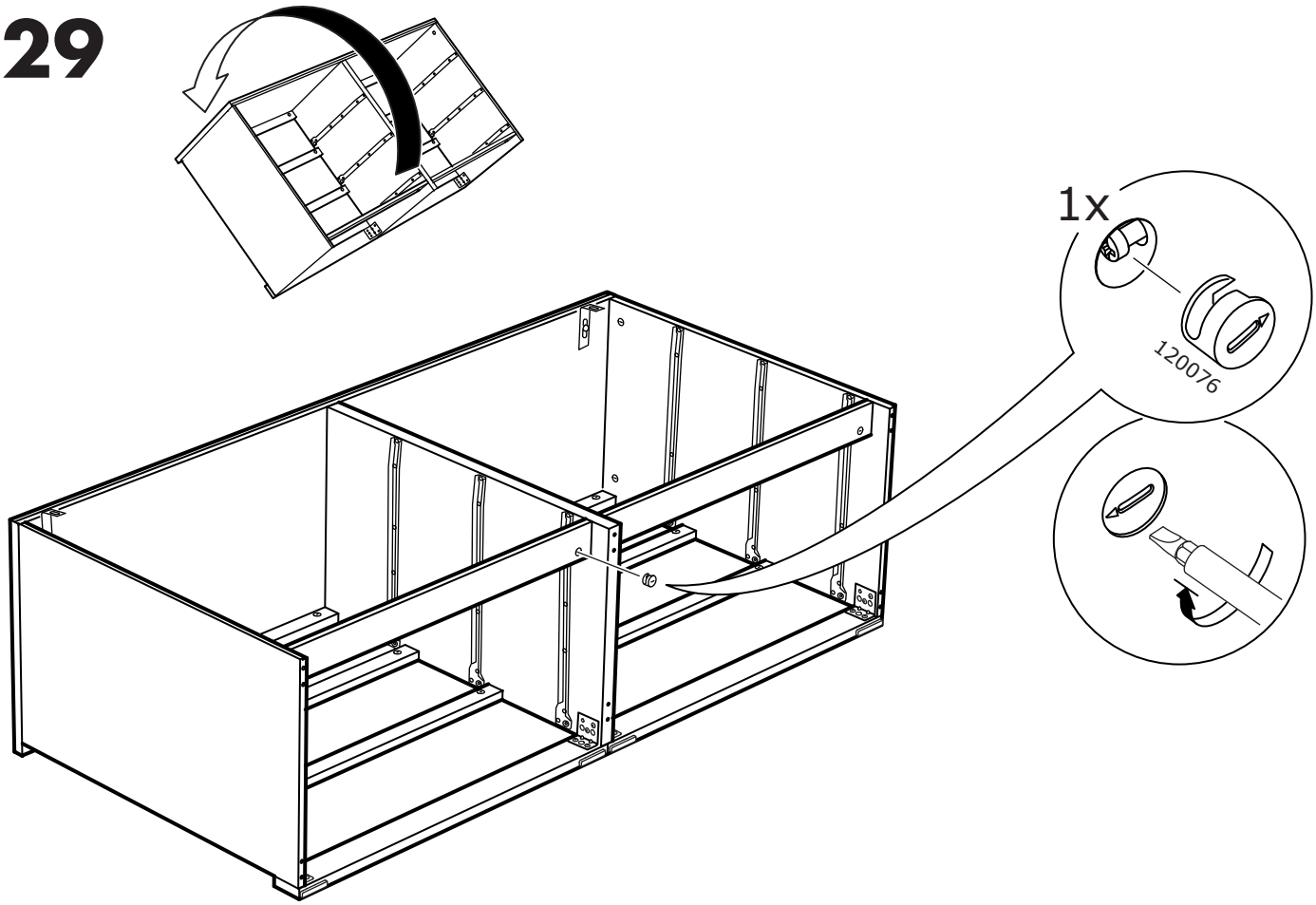

30

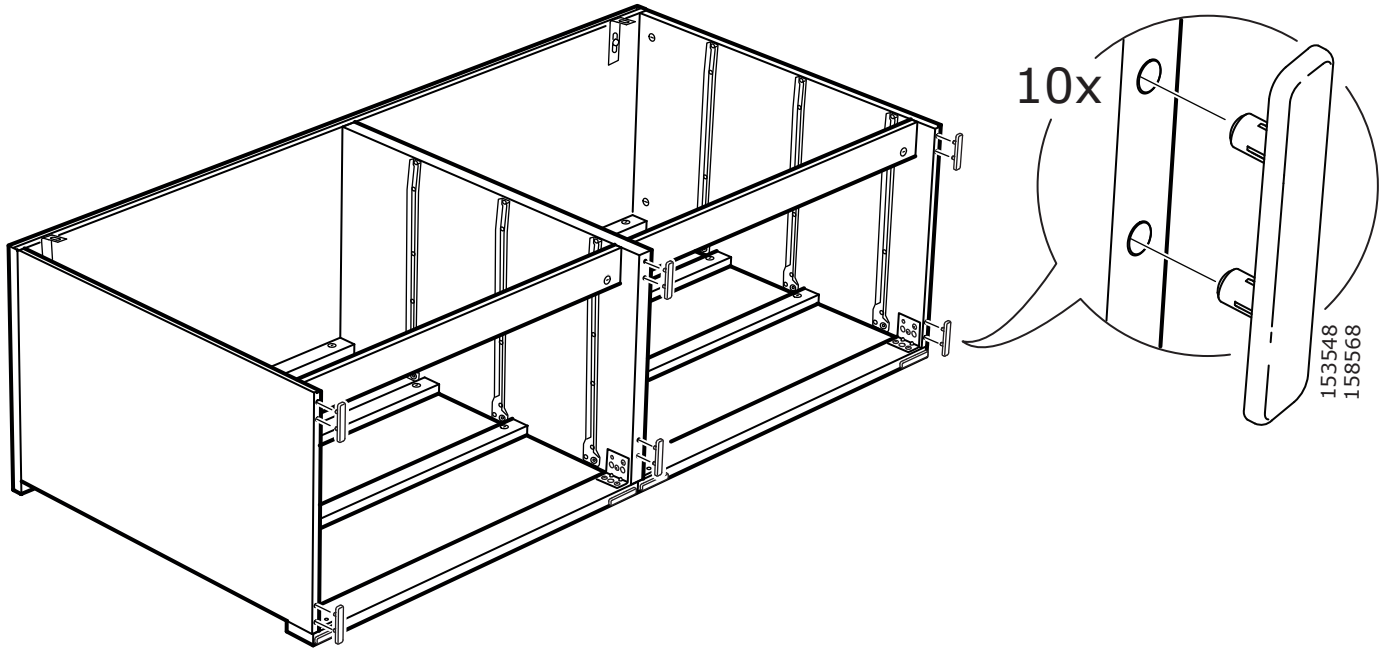

31

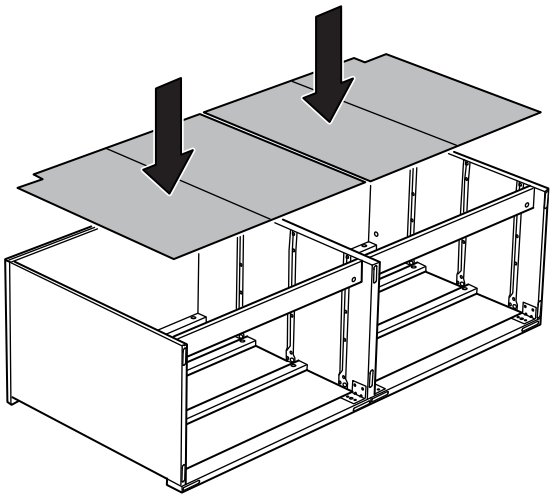

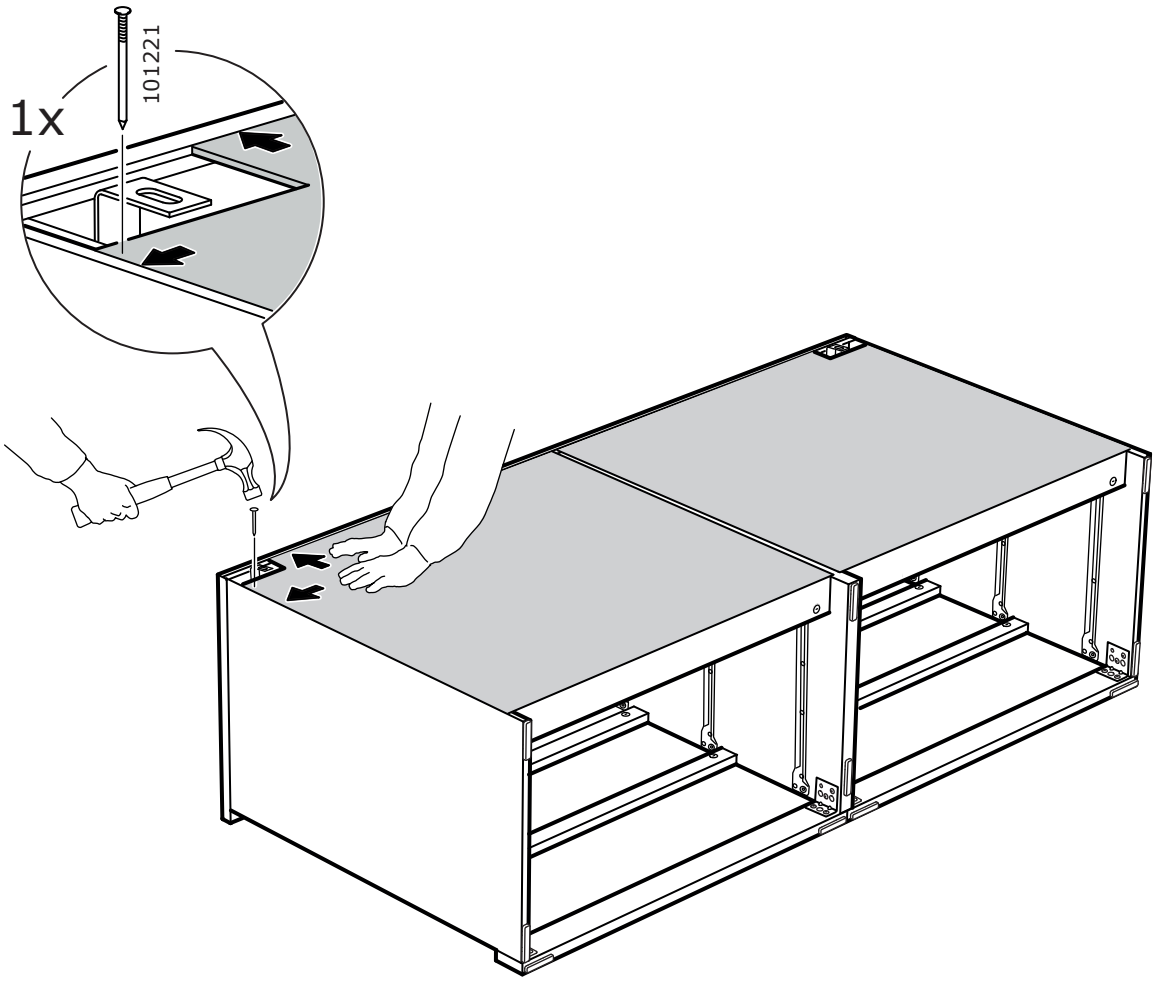

32

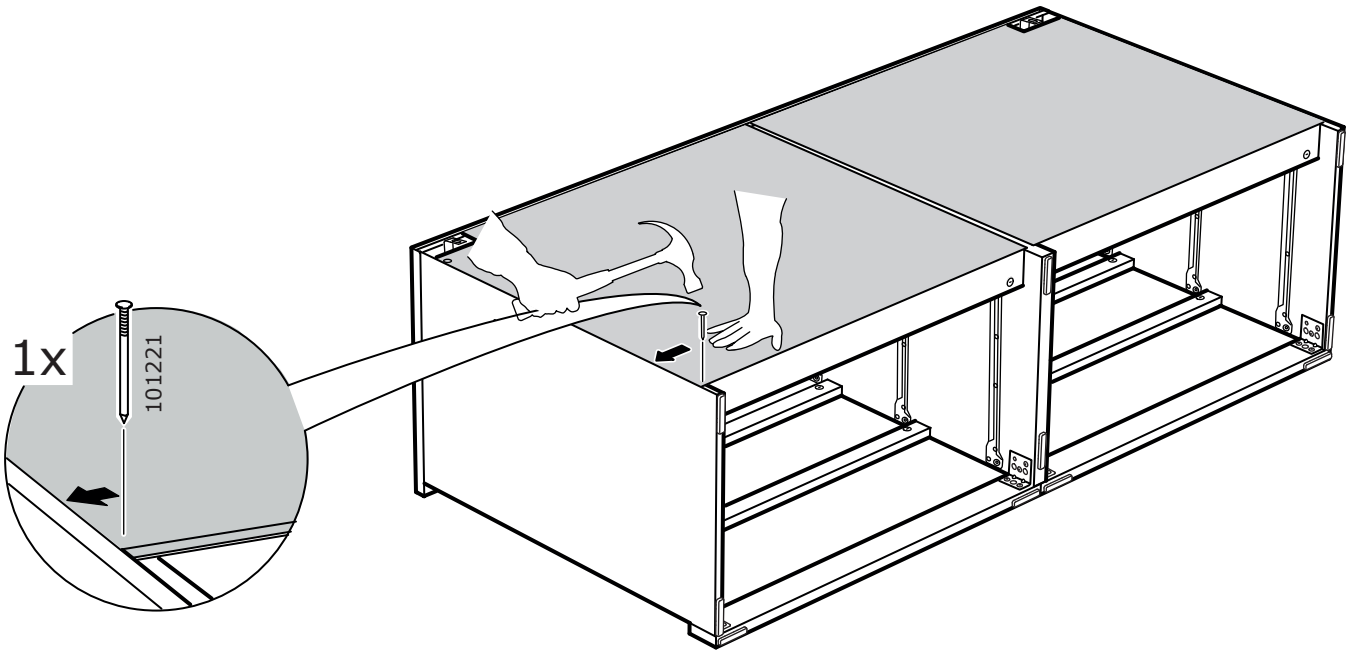

33

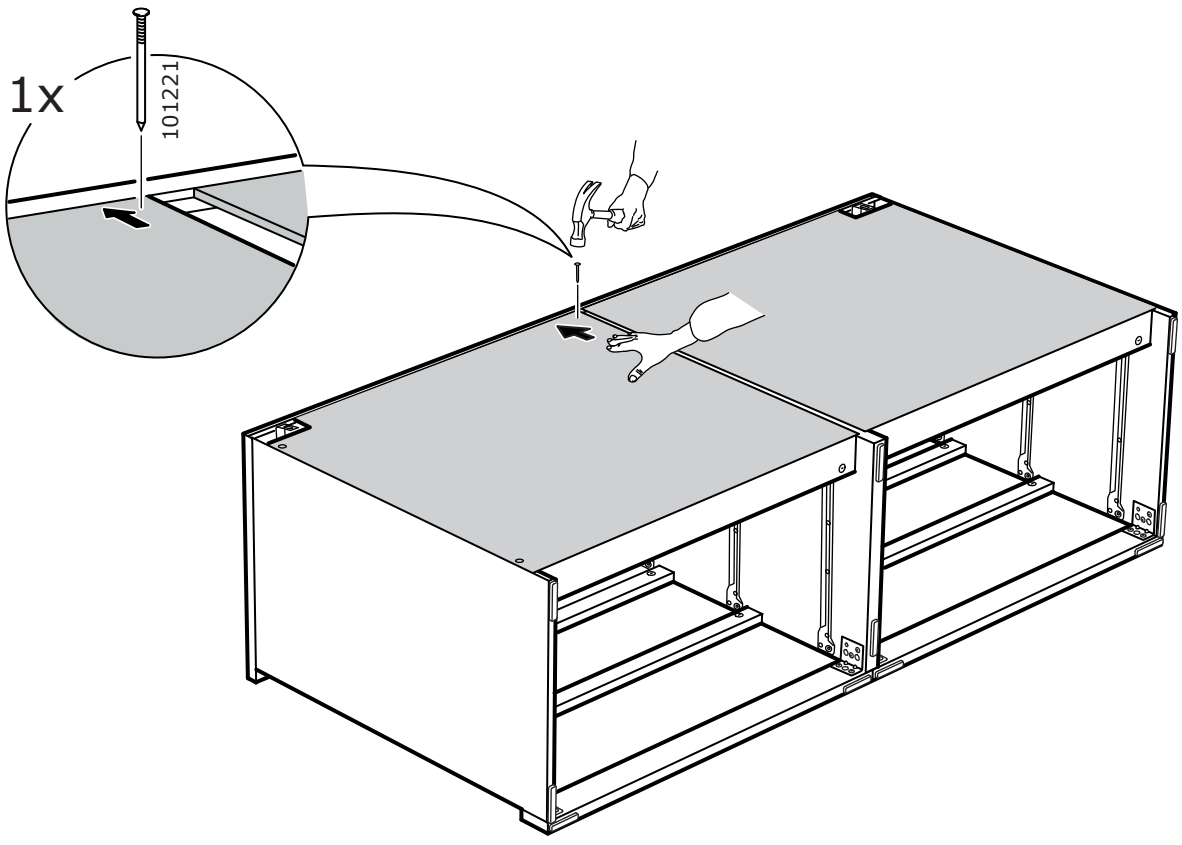

34

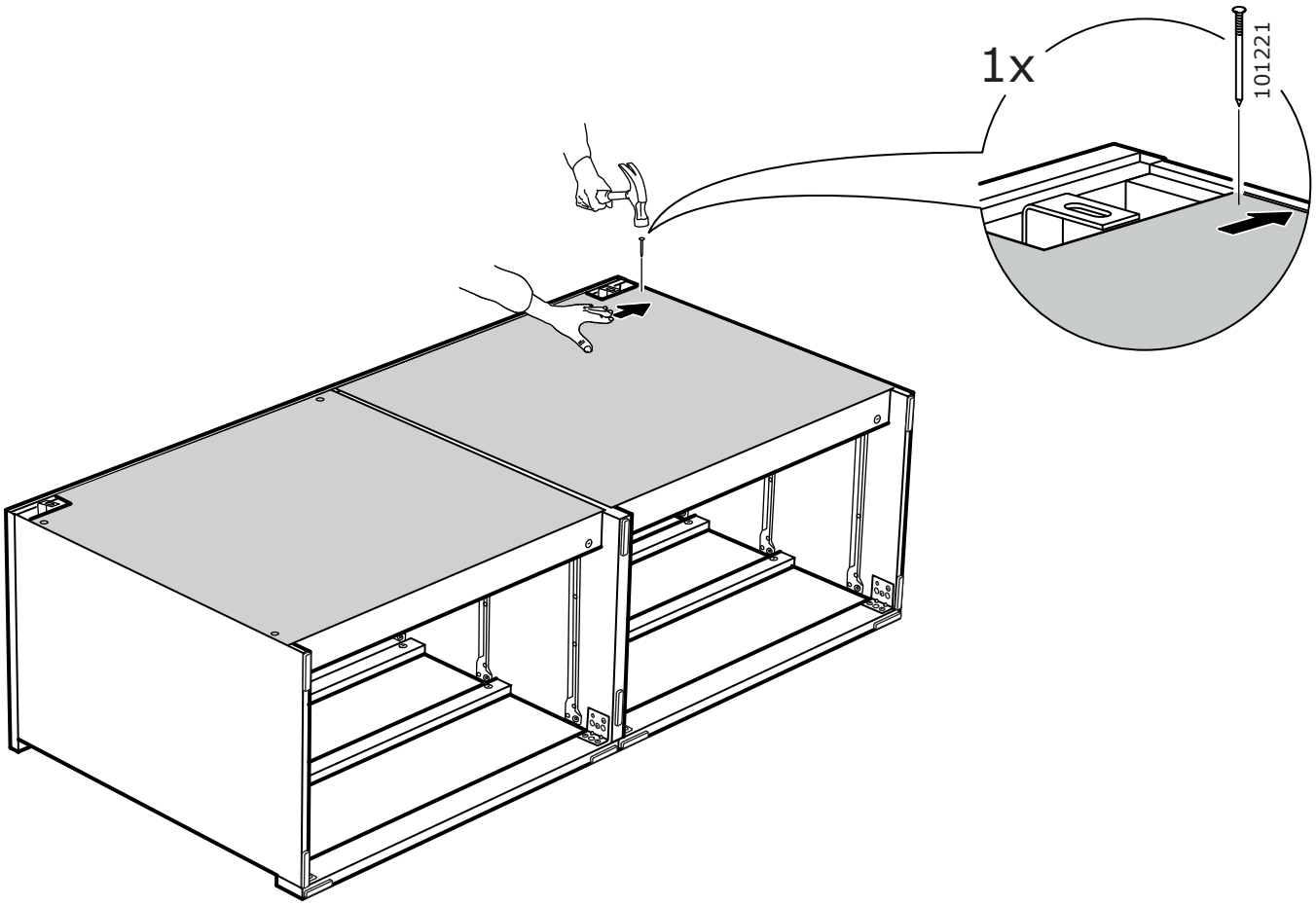

35

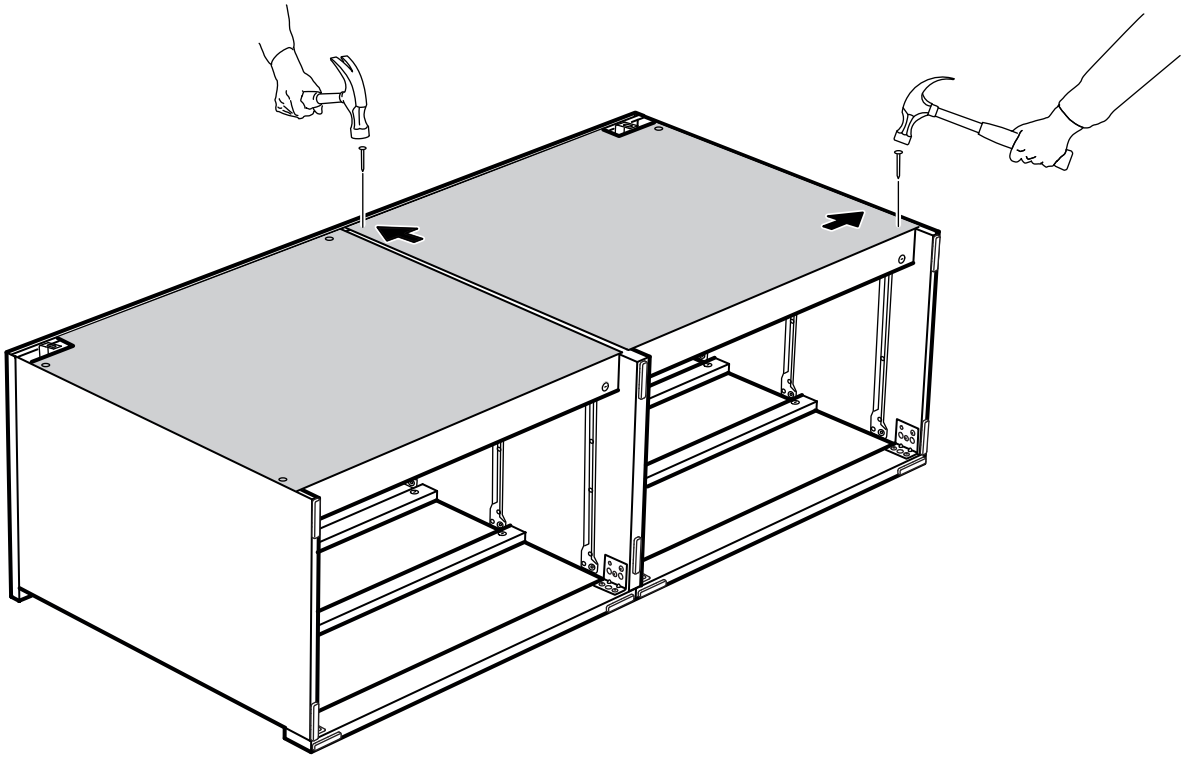

36

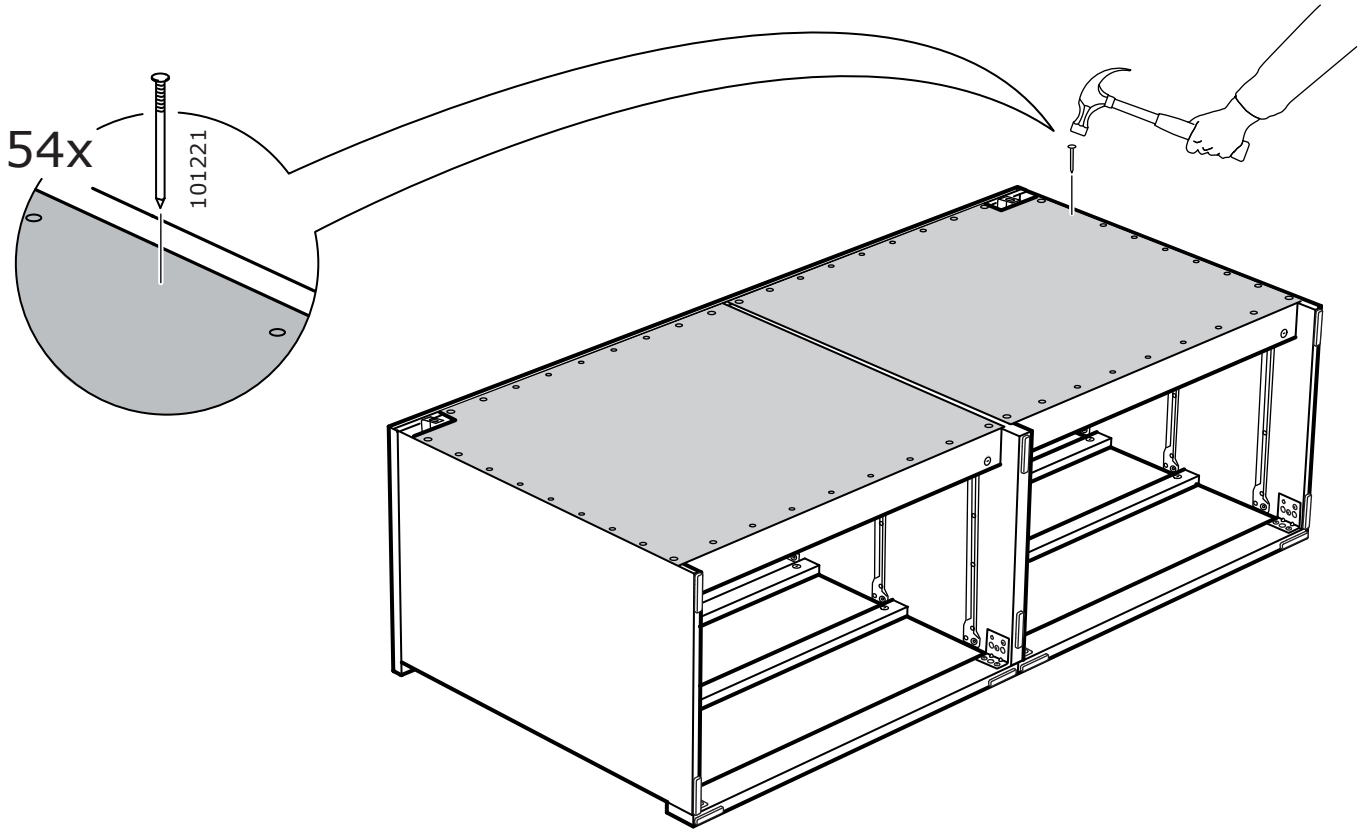

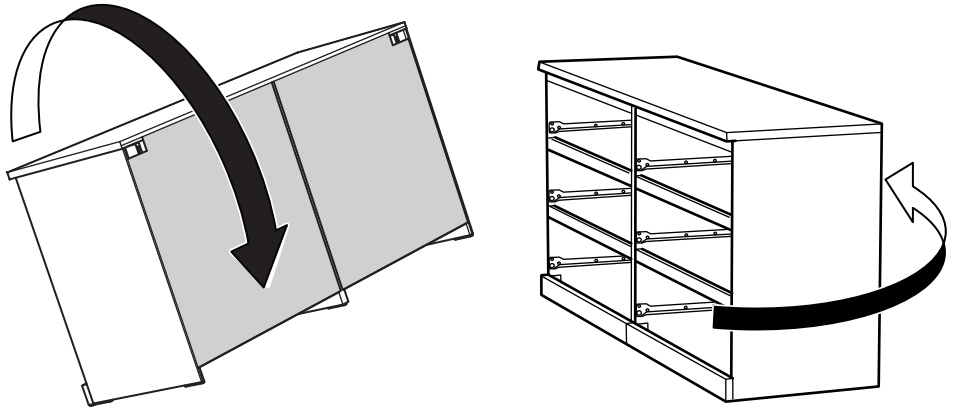

37

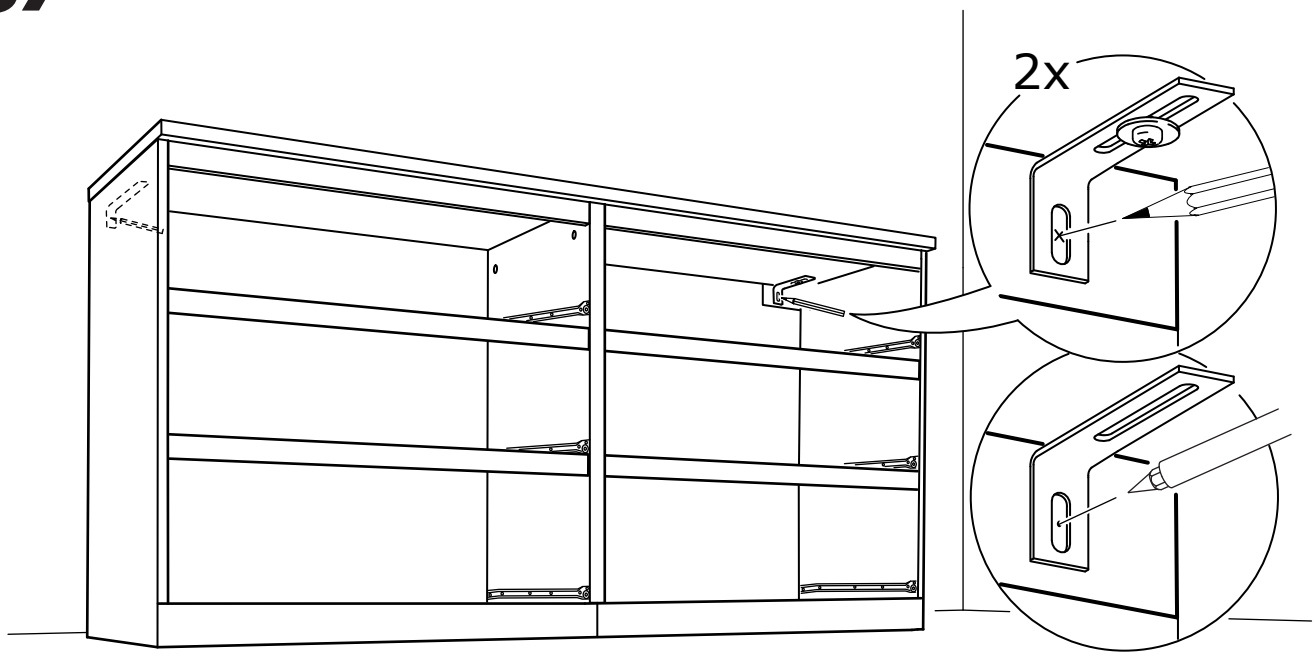

38

x

x

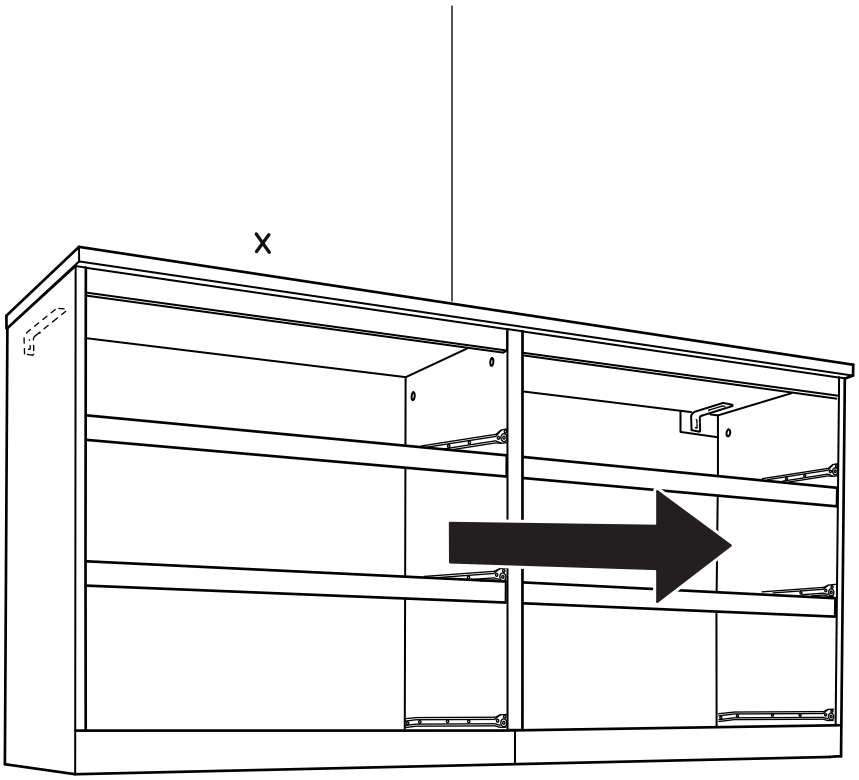

www.IKEA.com/secure-it

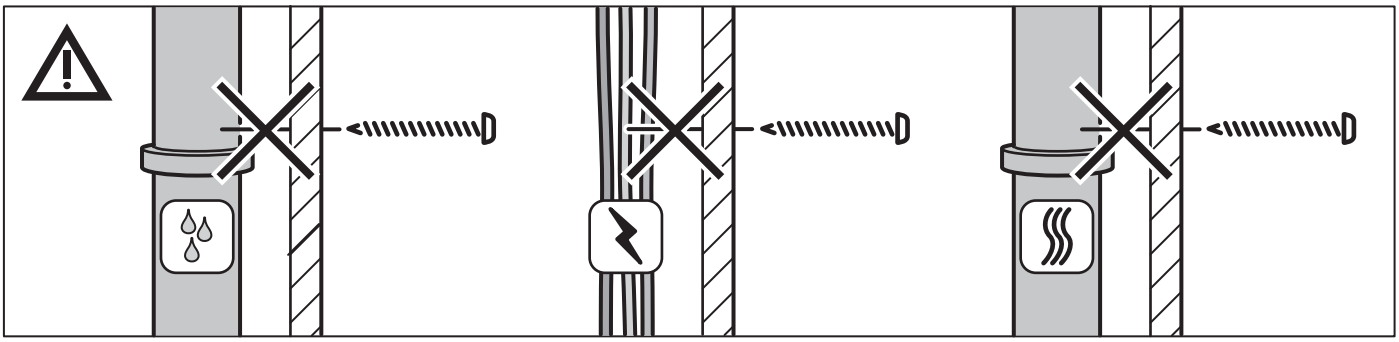

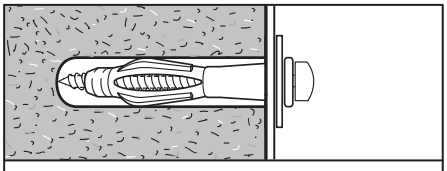

Ø 8 mm
(5/16")

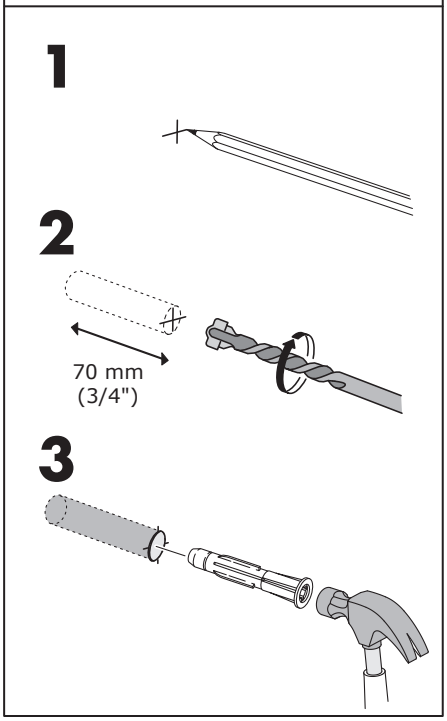

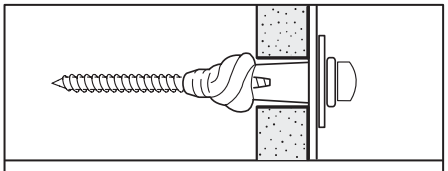

Ø 8 mm
(5/16")

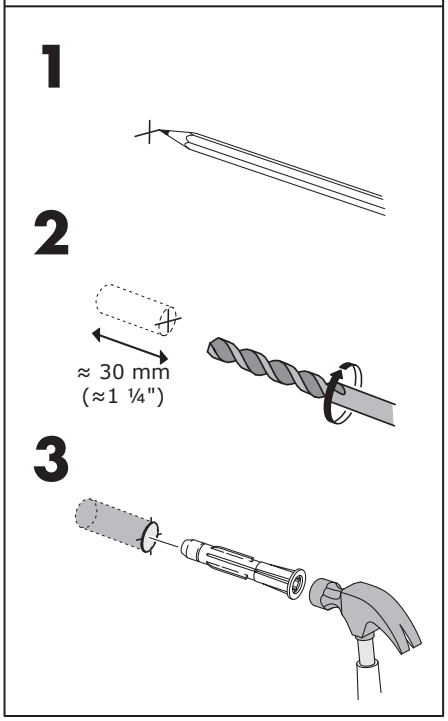

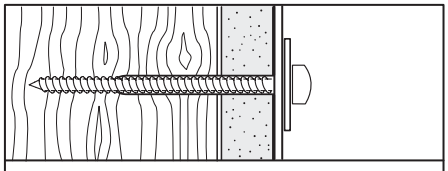

Ø 3 mm
(1/8")

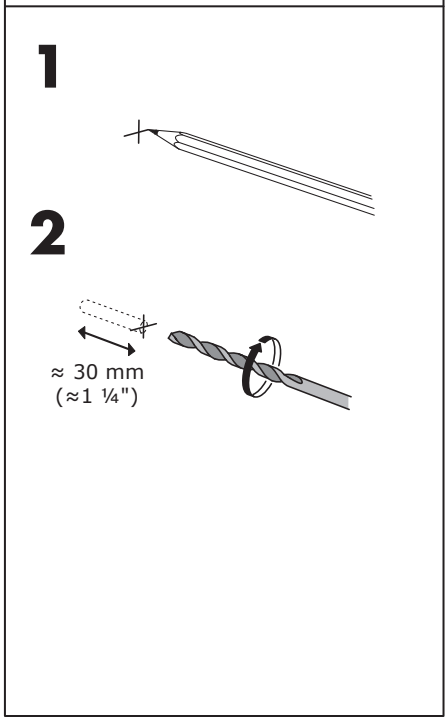

39

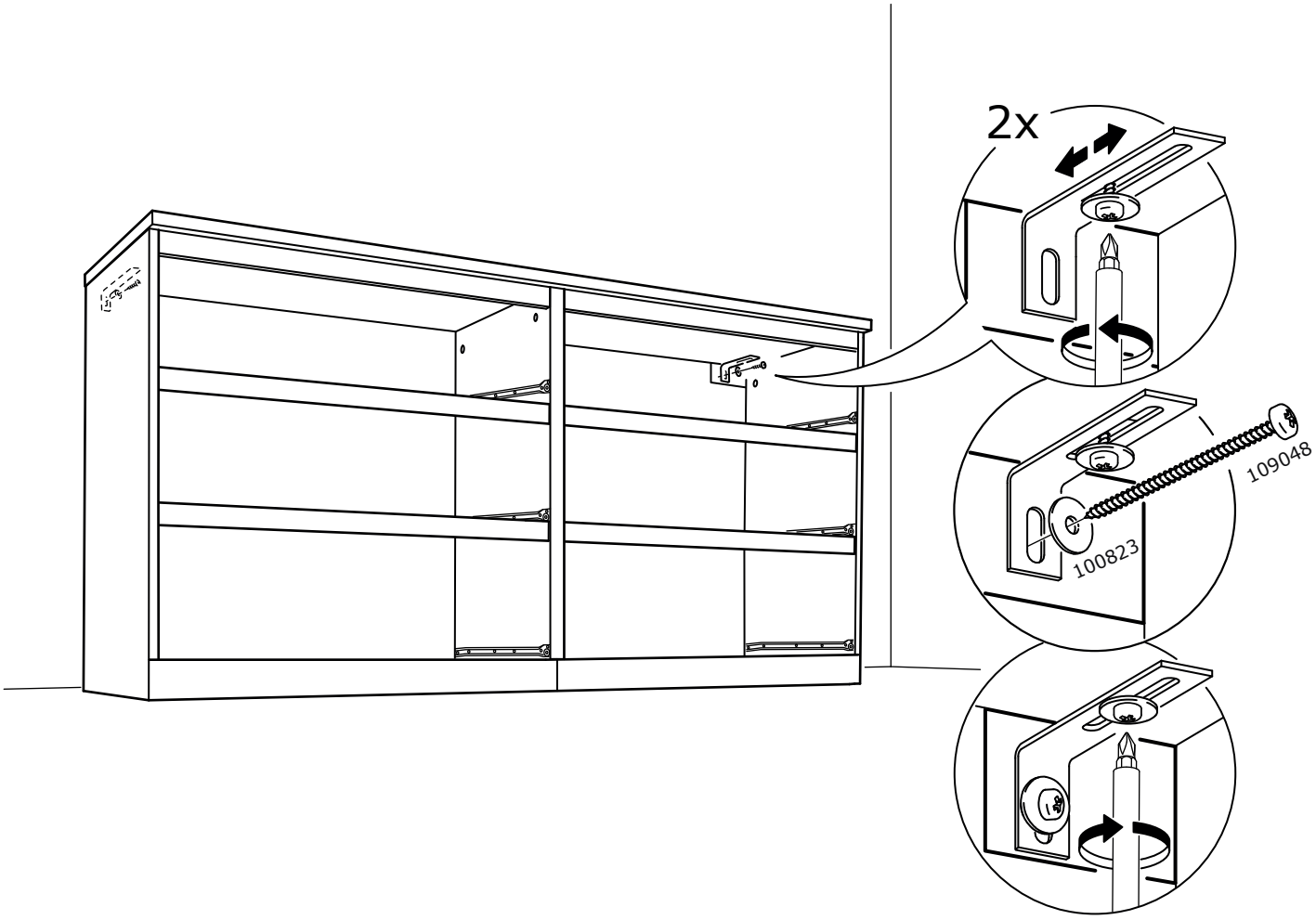

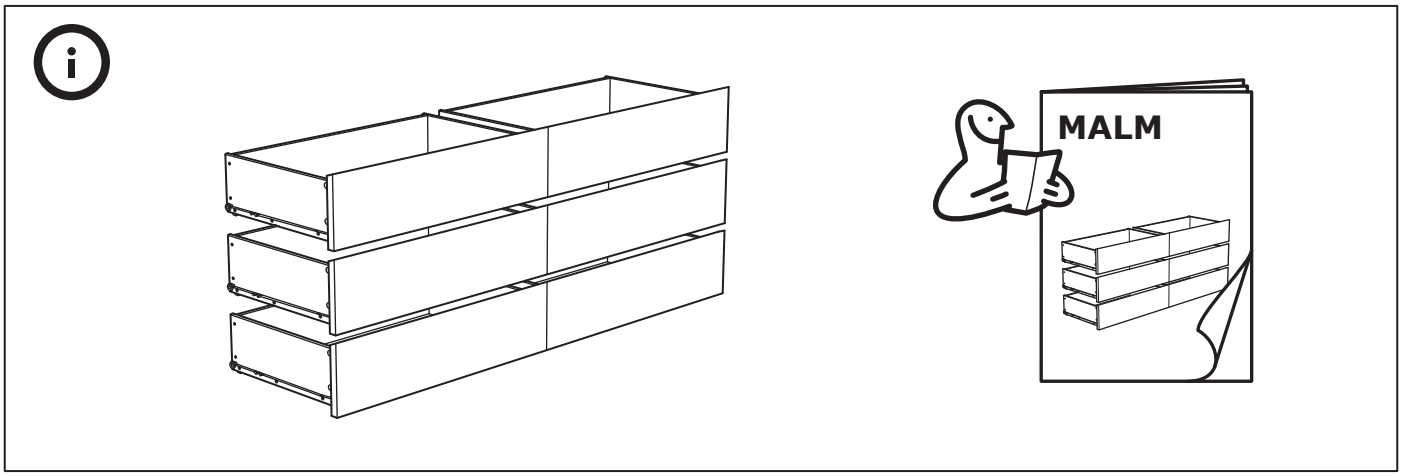

40

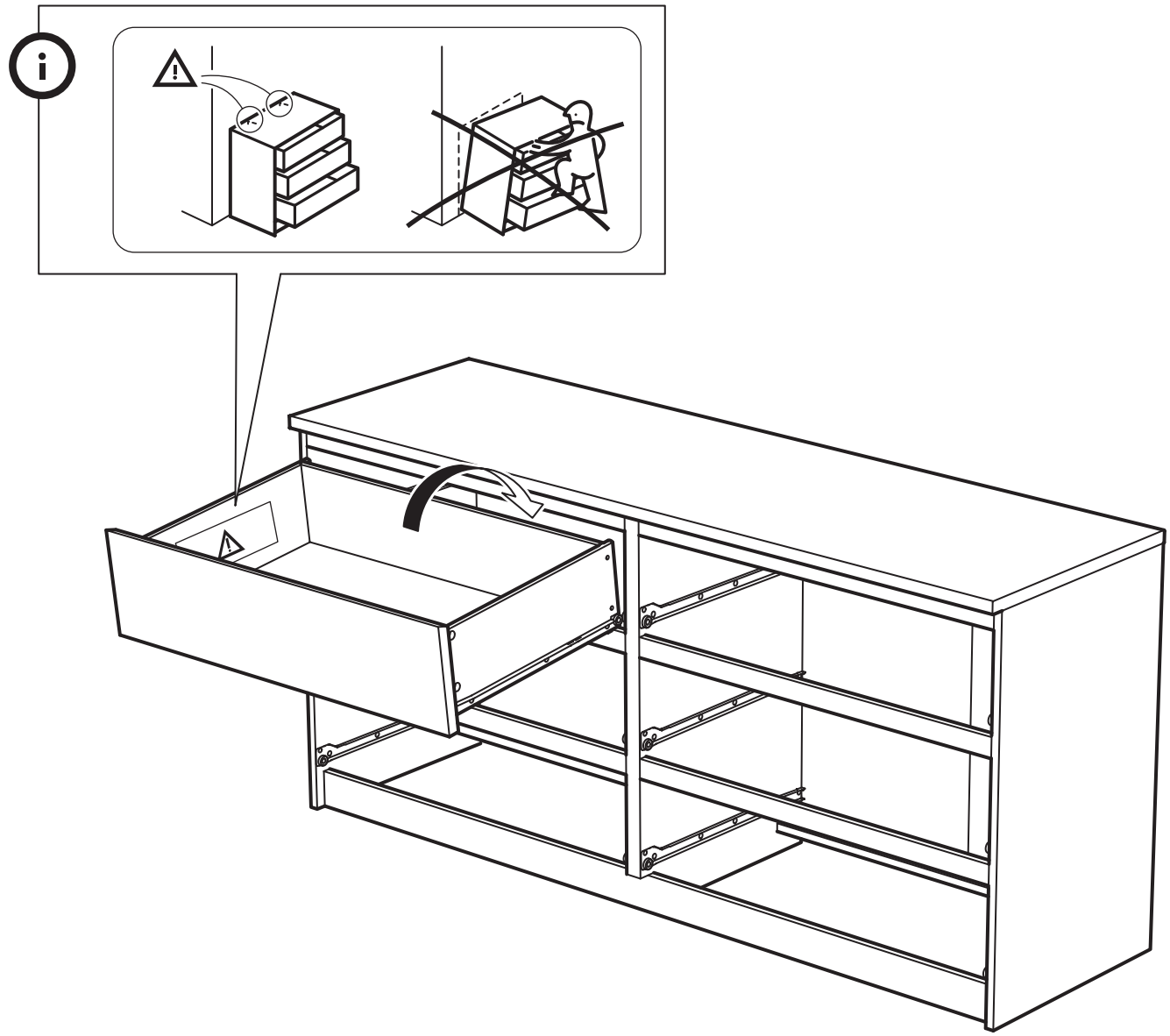

© Inter IKEA Systems B.V. 2017

MALM

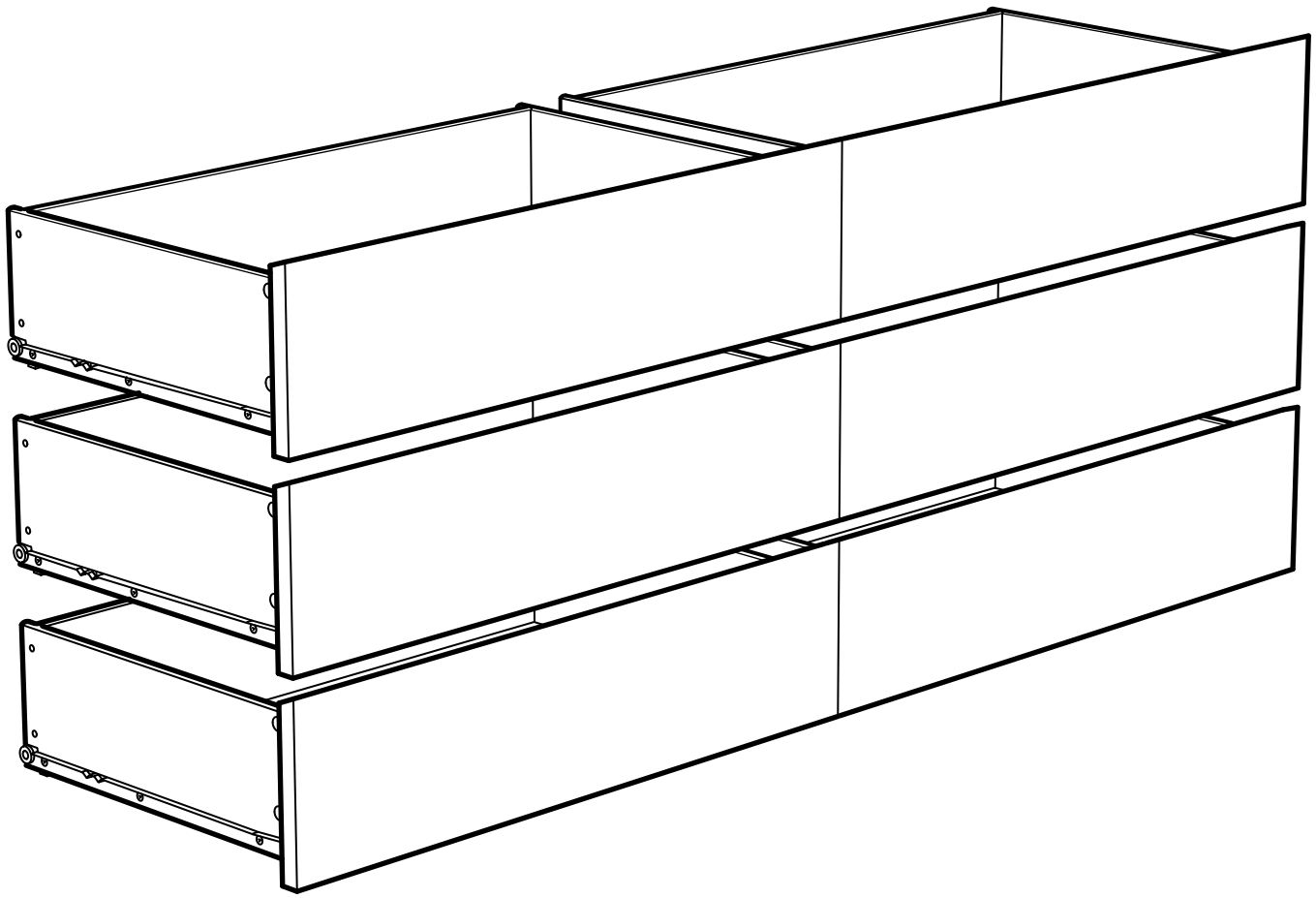

Design and Quality
IKEA of Sweden

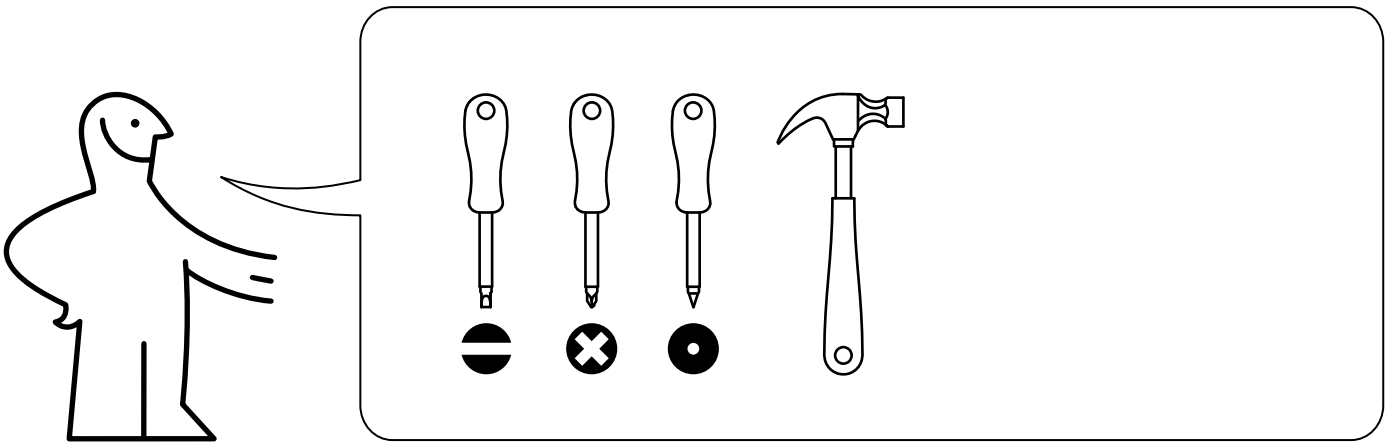

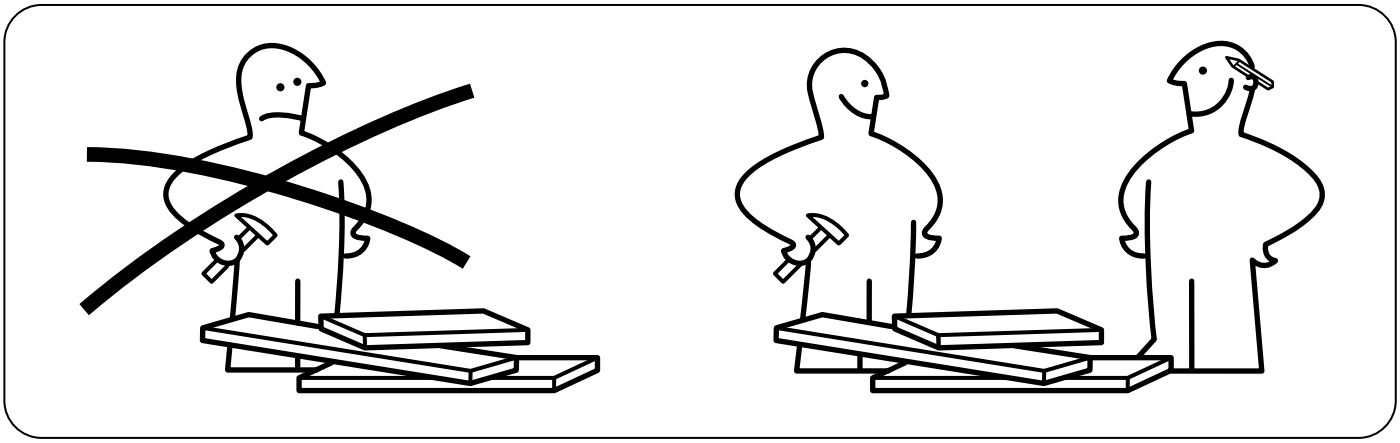

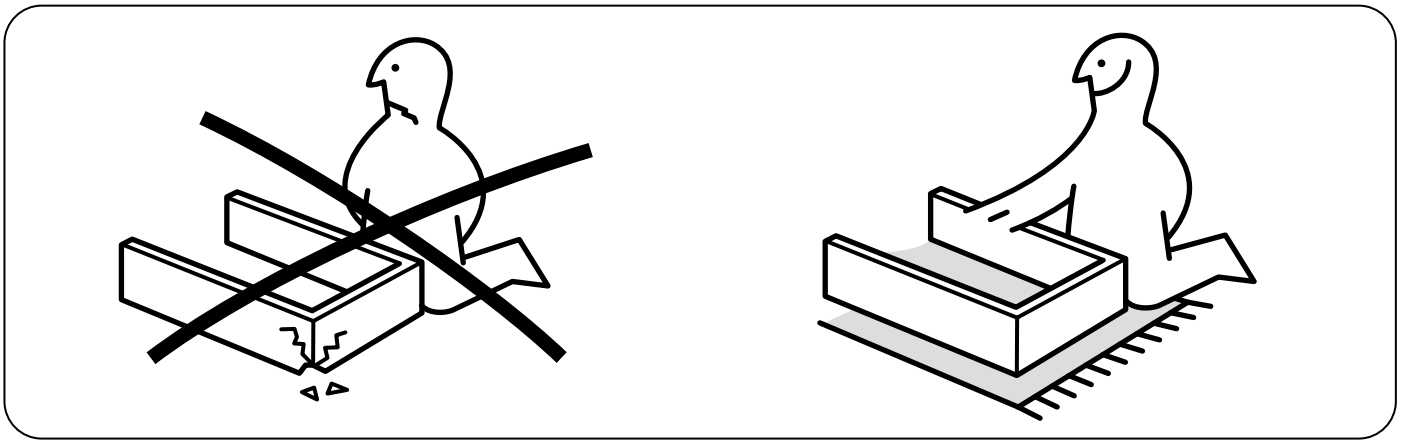

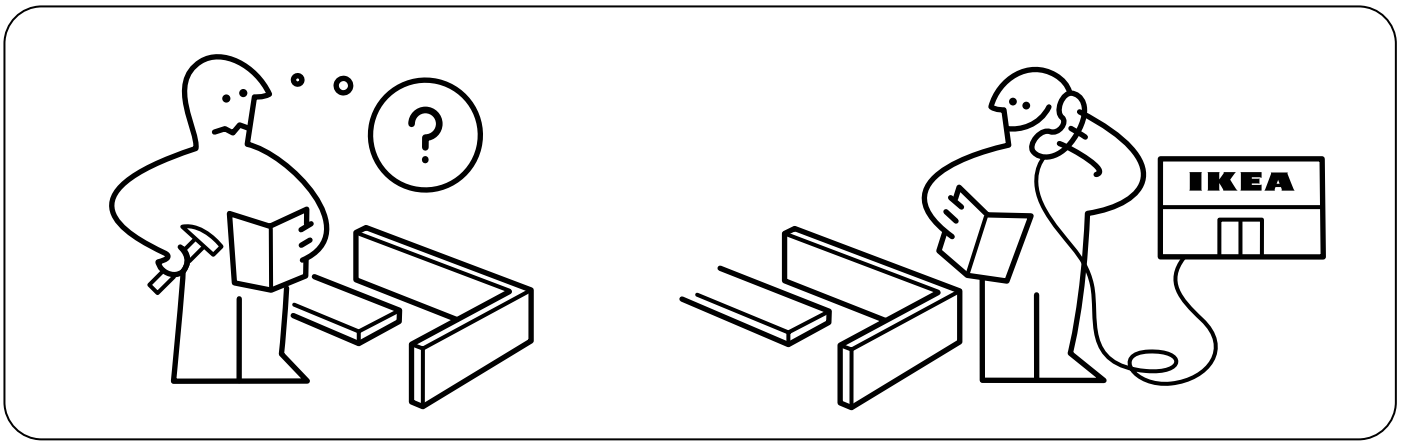
?
IKEA

2

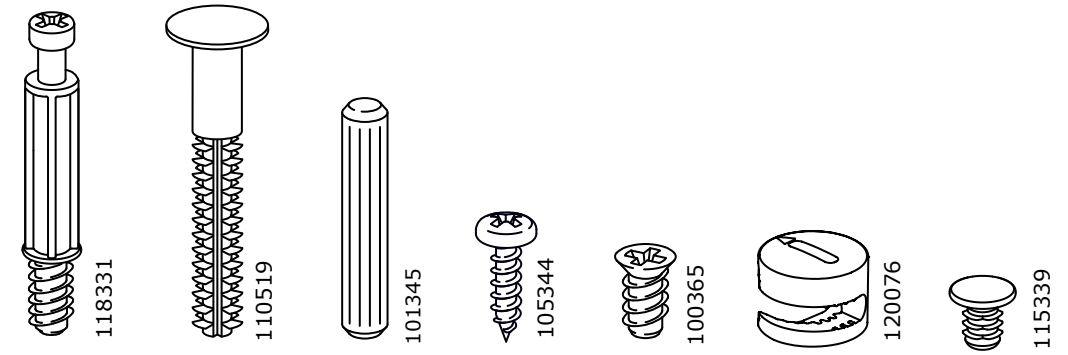

12x 12x 12x 6x 18x 12x 6x

2x

6x

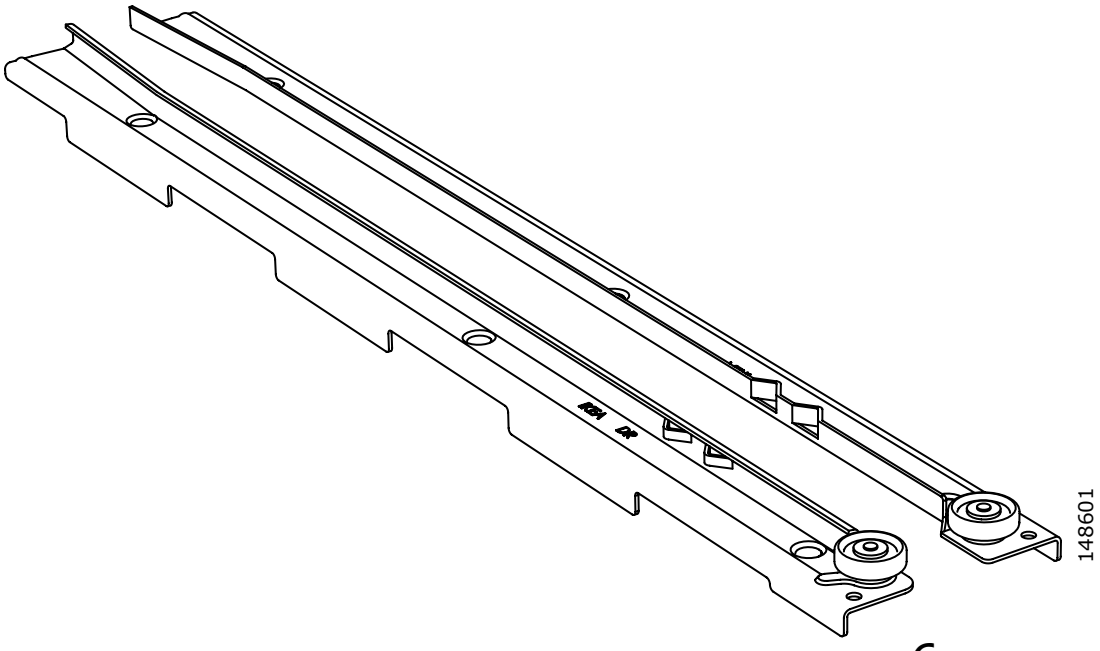

6x

1

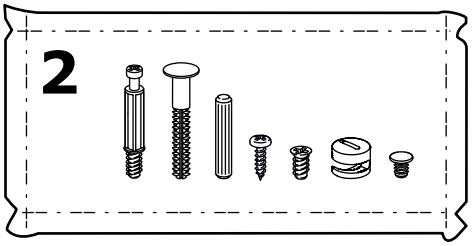

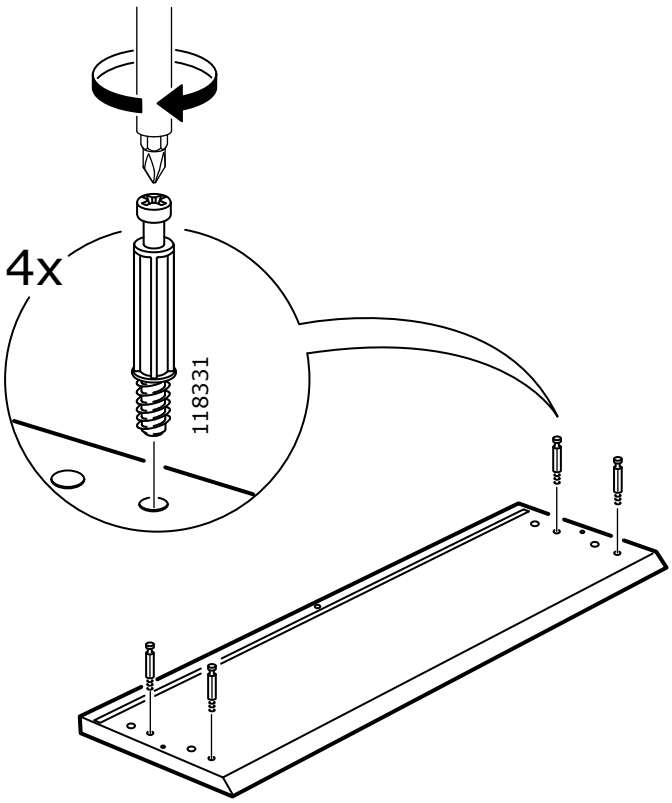

2

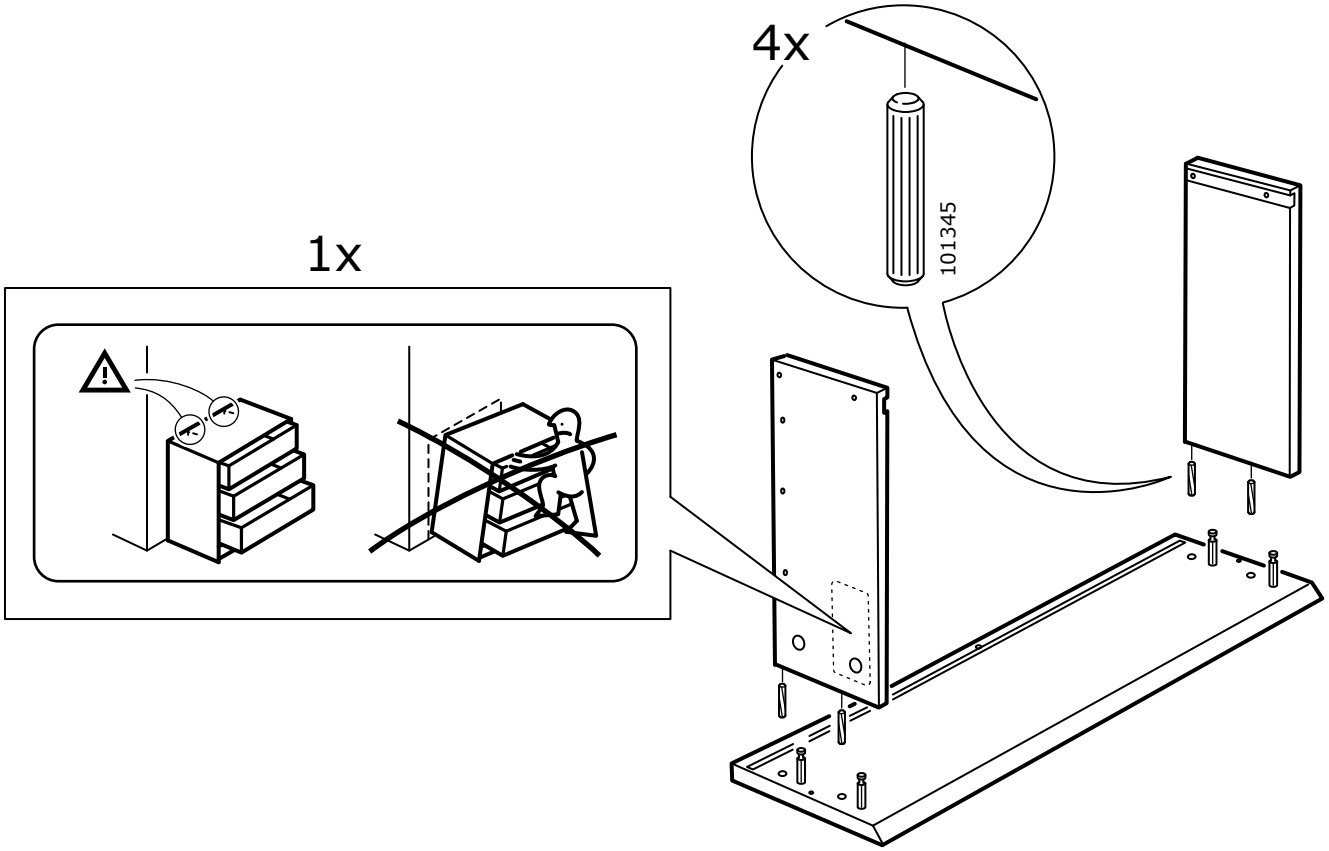

3

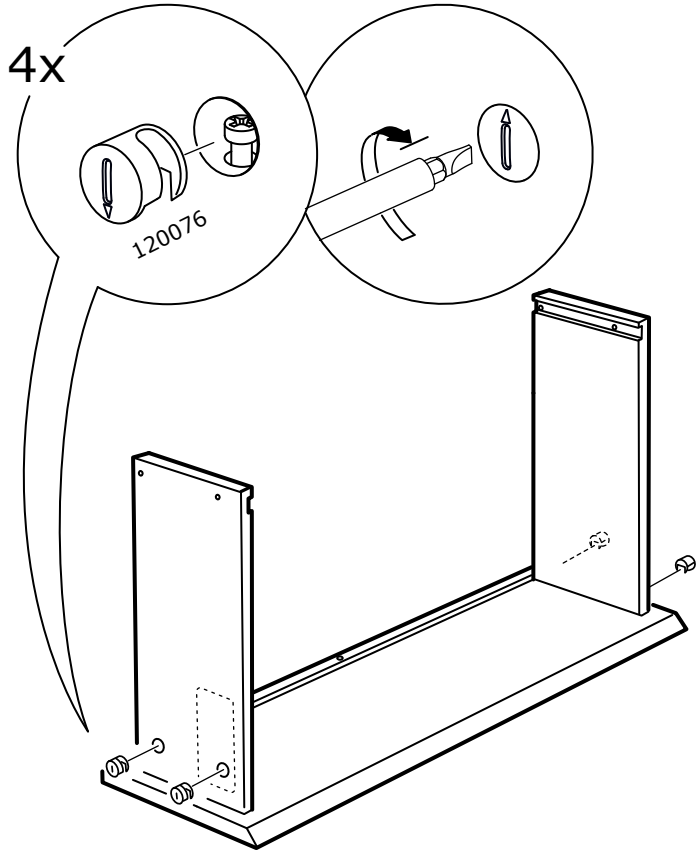

4

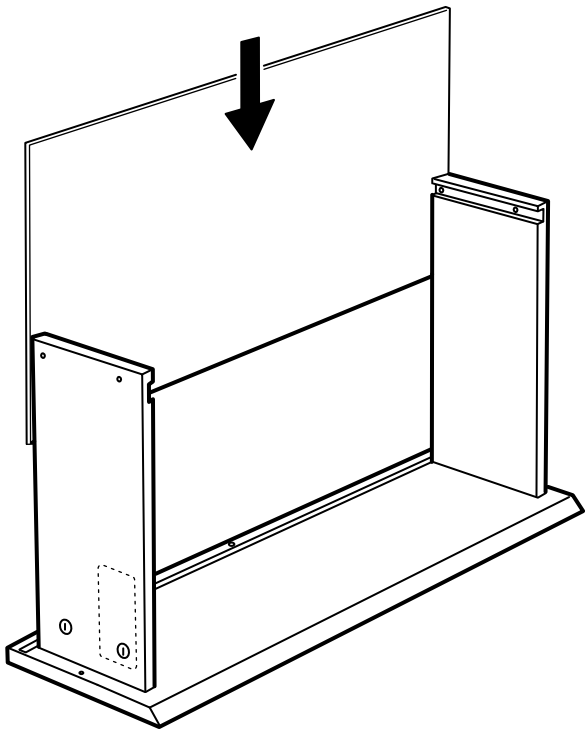

5

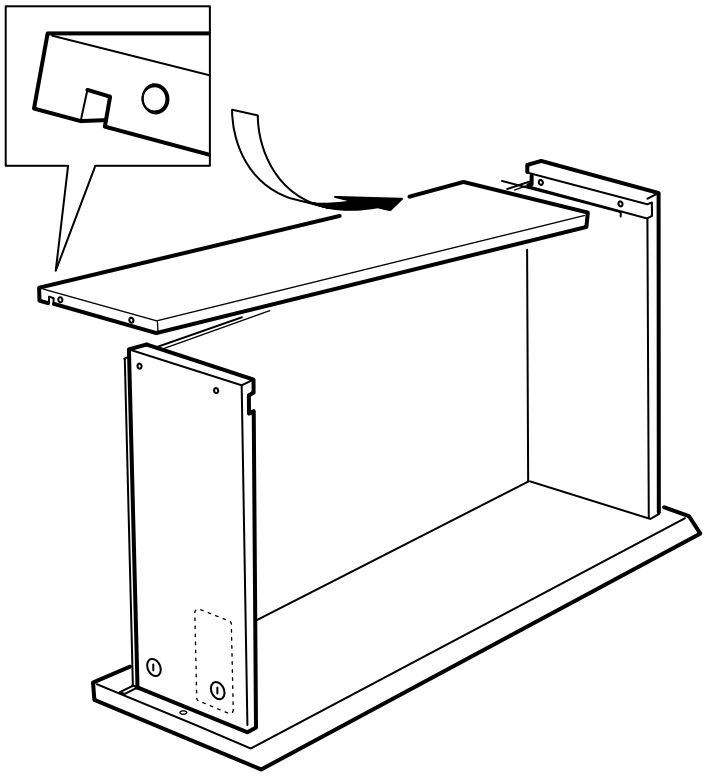

6

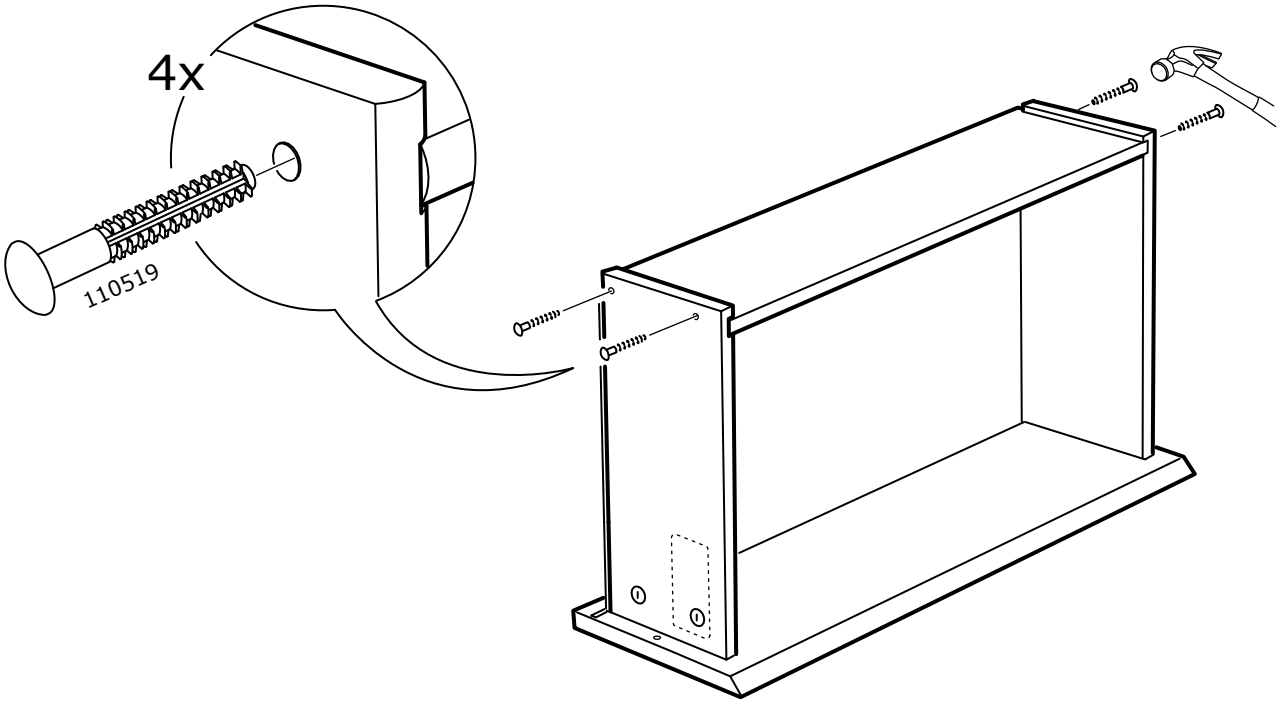

7

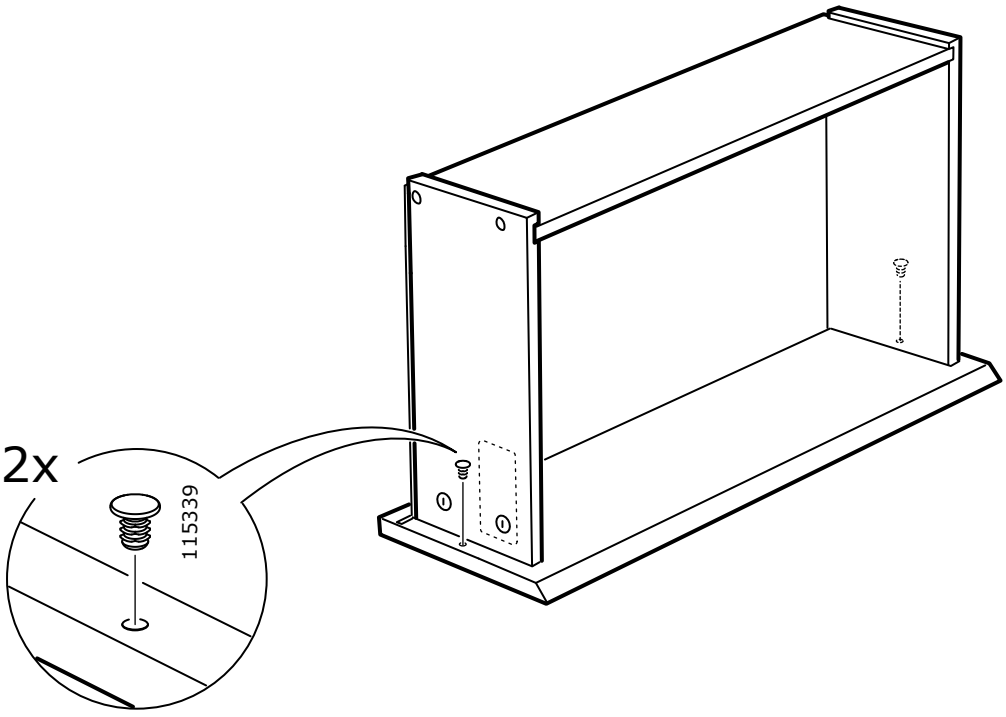

8

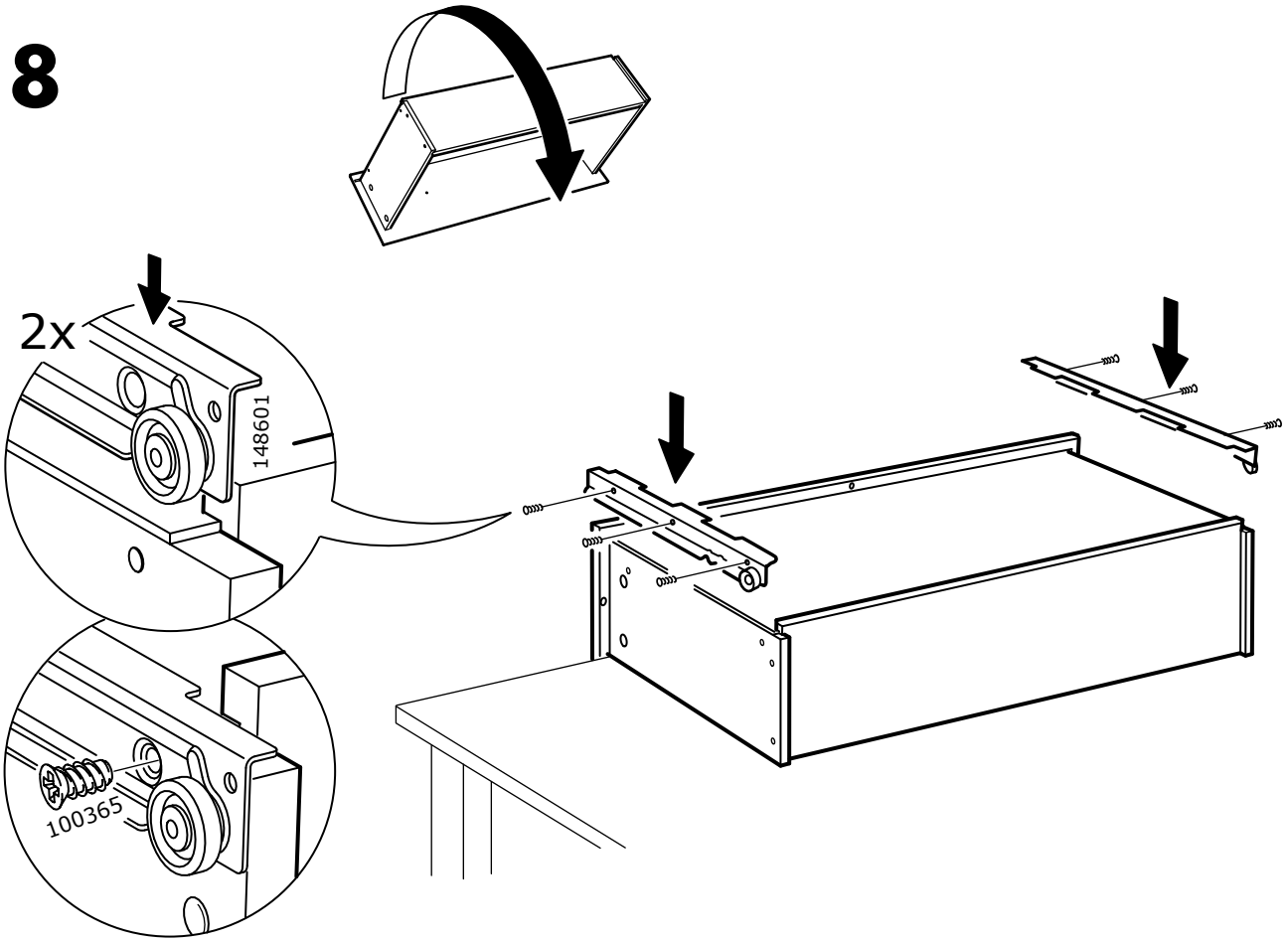

9

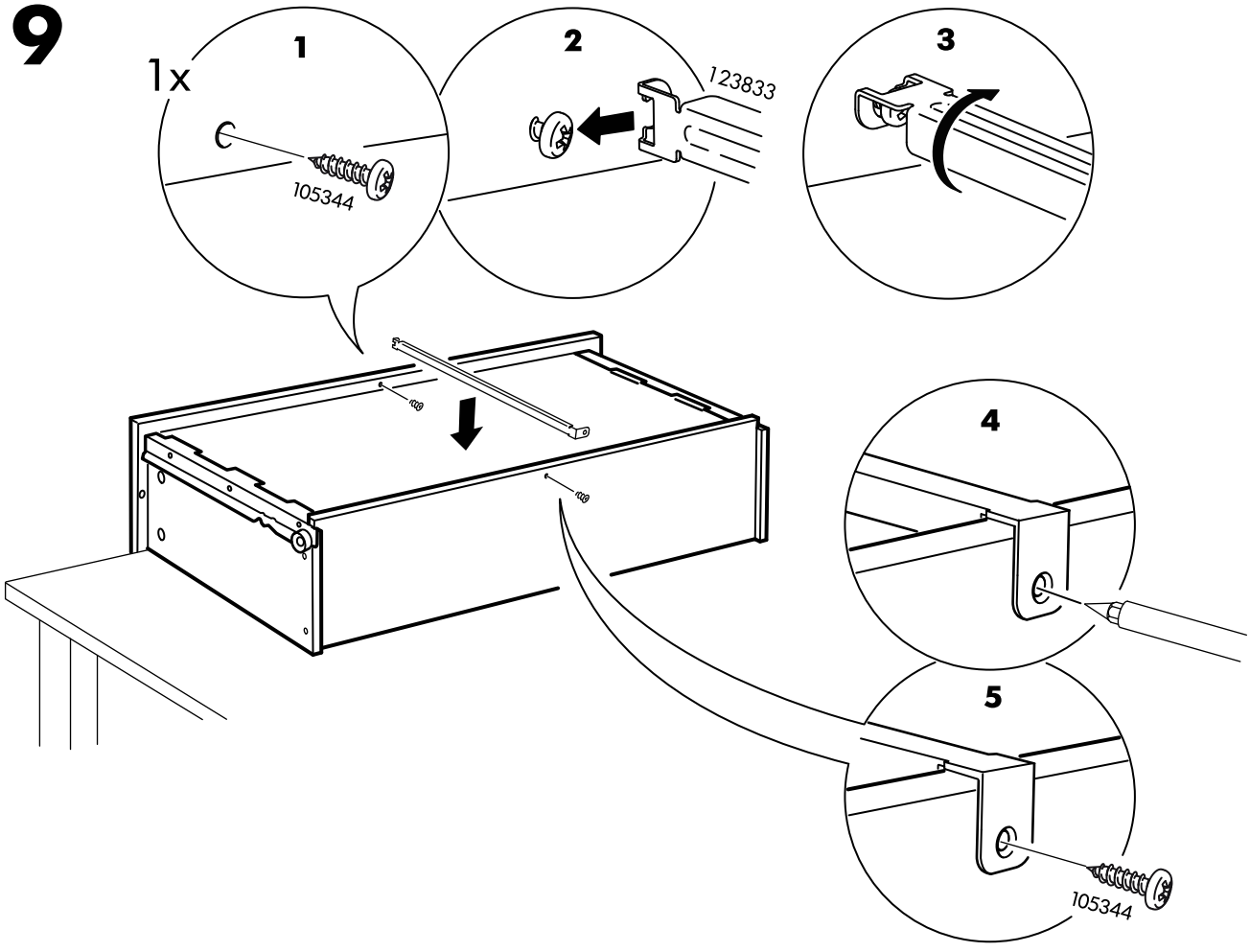

10

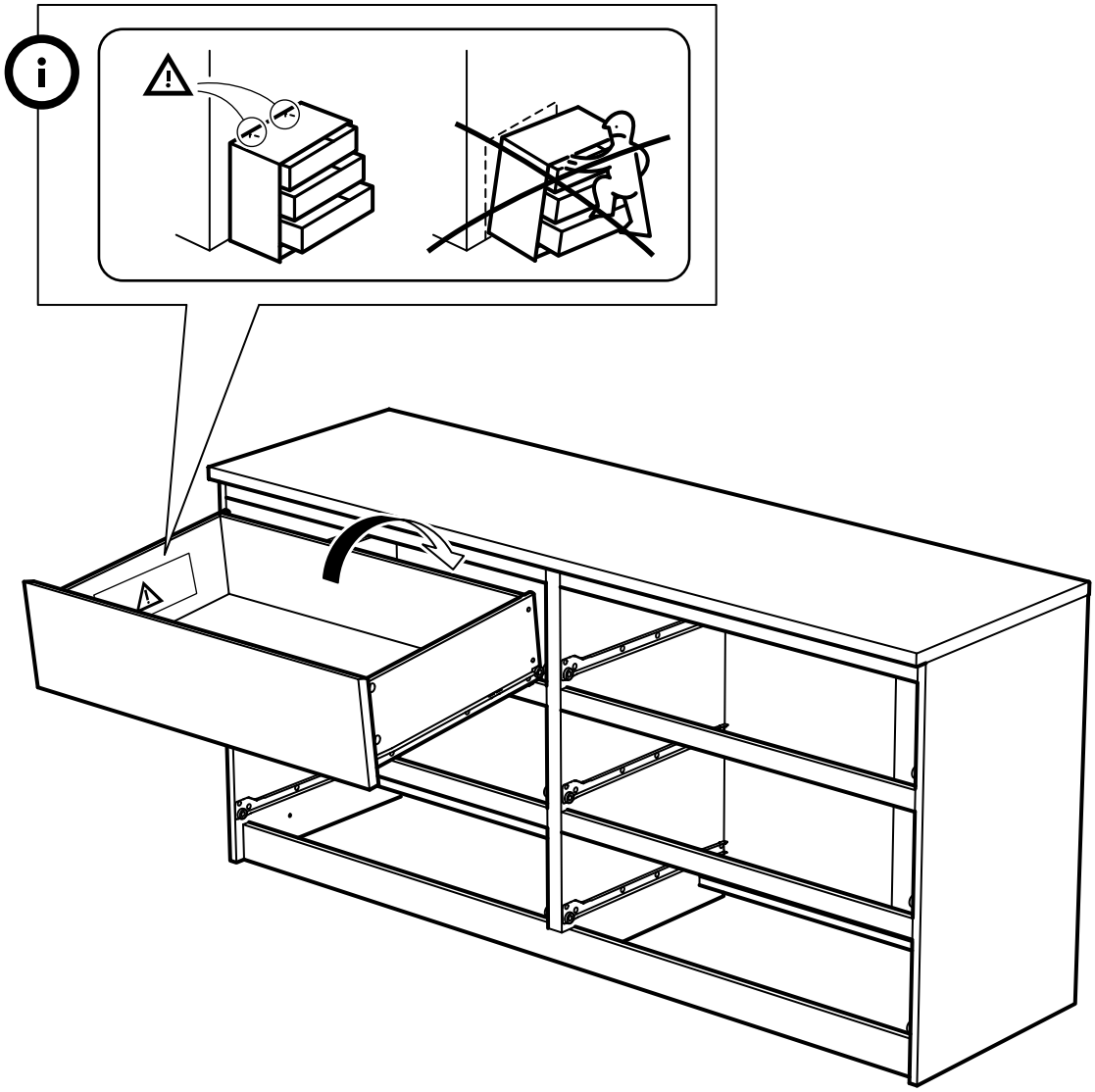

© Inter IKEA Systems B.V. 2016