TYSSEDAL

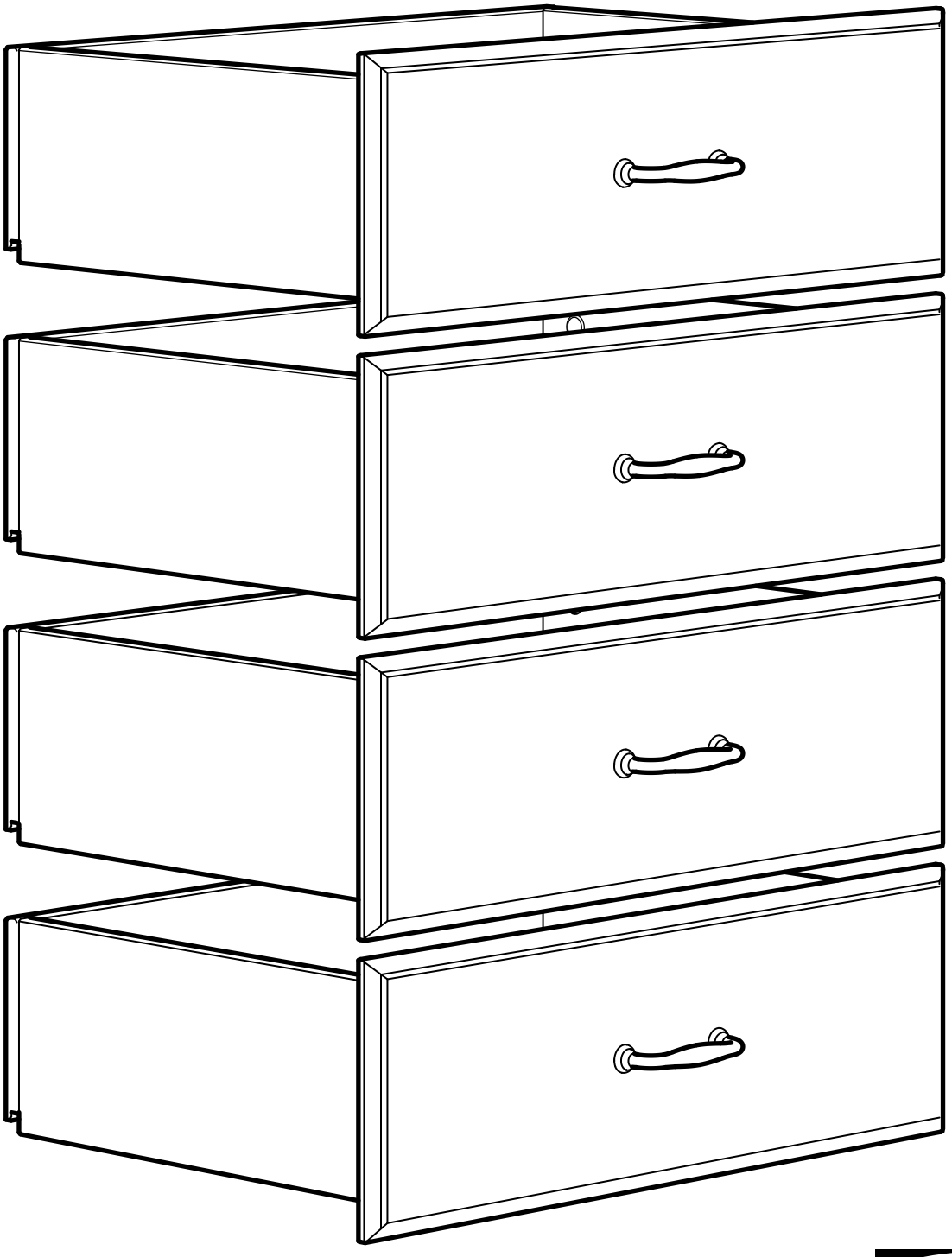

Design and Quality
IKEA of Sweden

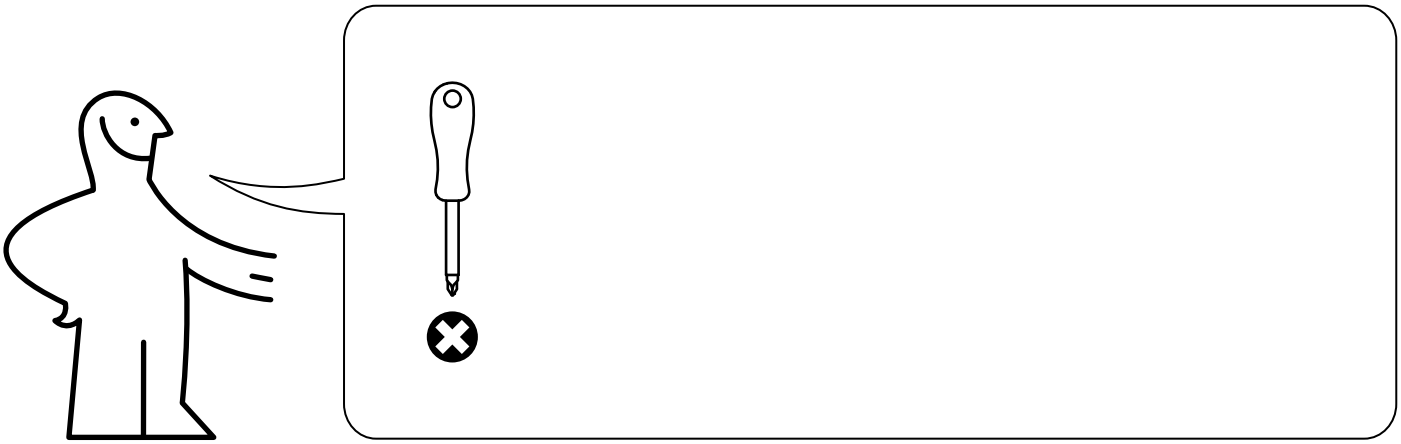

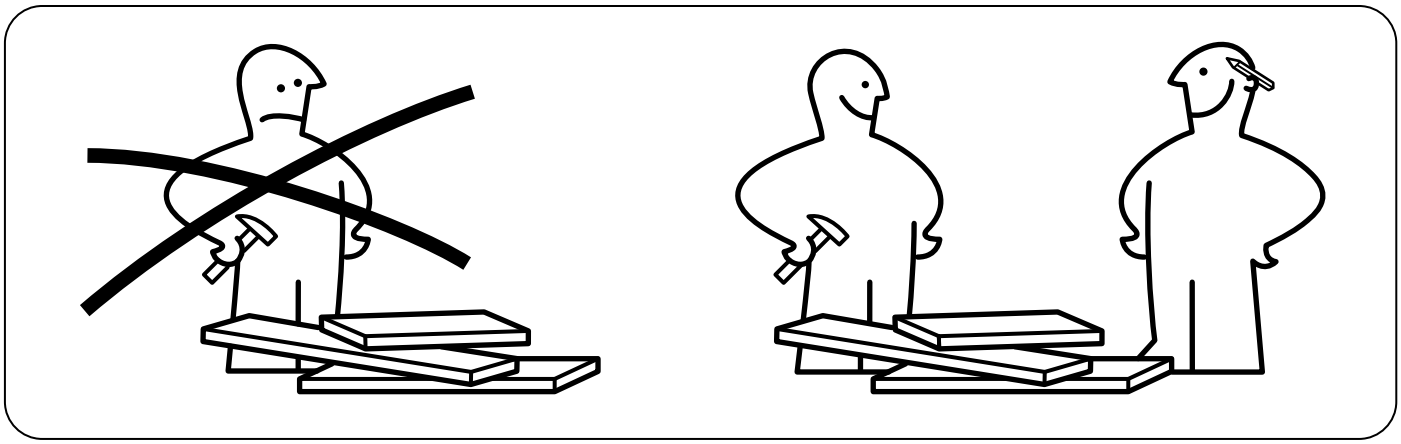

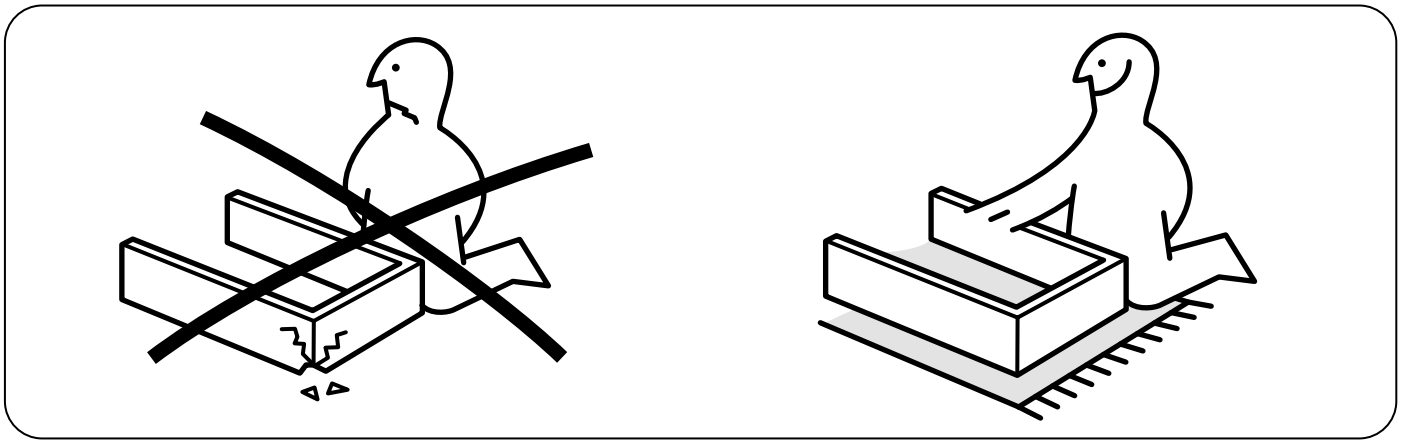

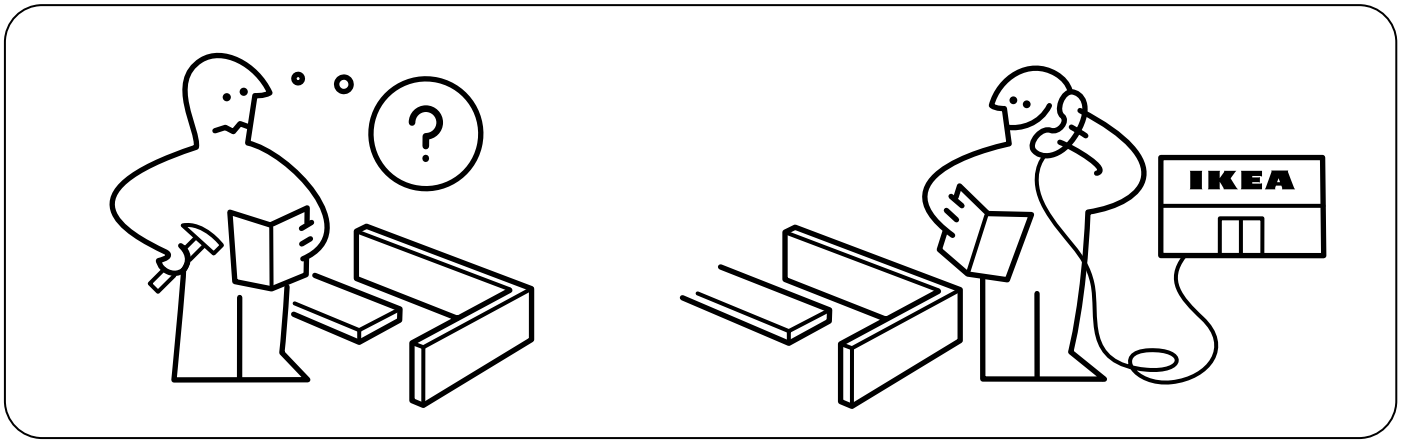
?
IKEA

2

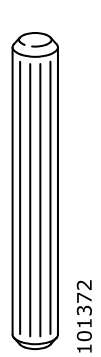

16x

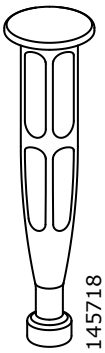

16x

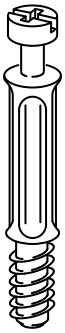

16x

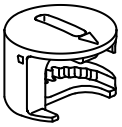

32x

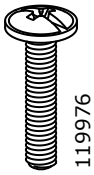

8x

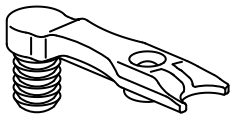

8x

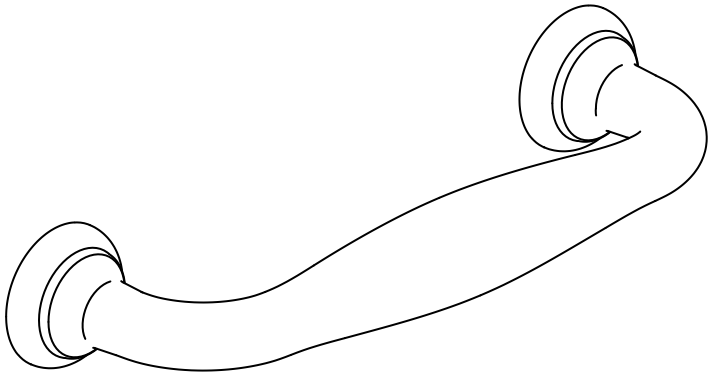

4x

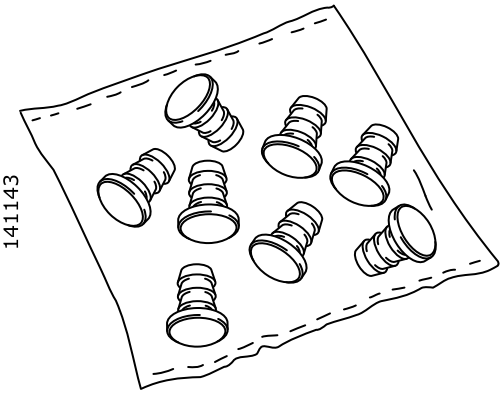

1x

1

4x

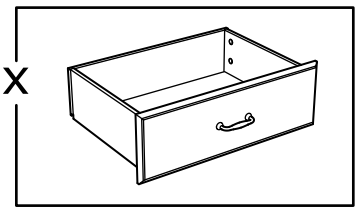

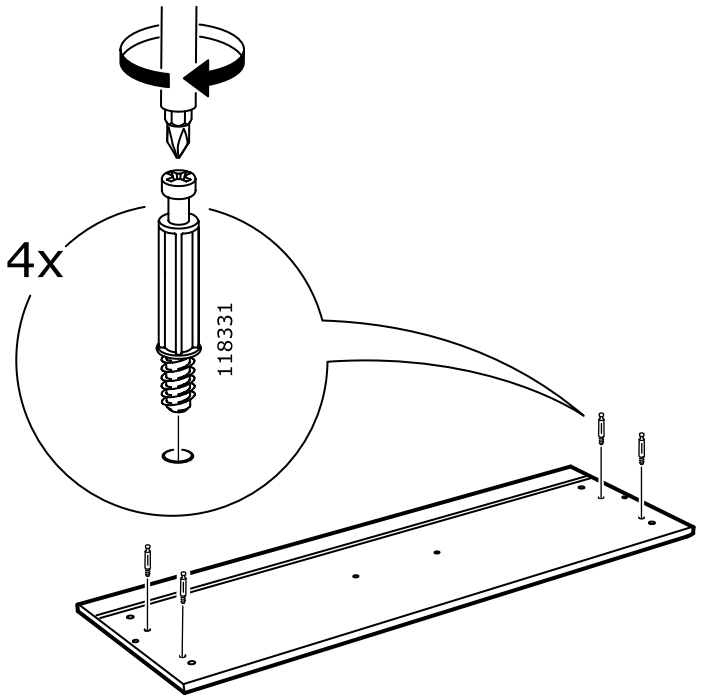

2

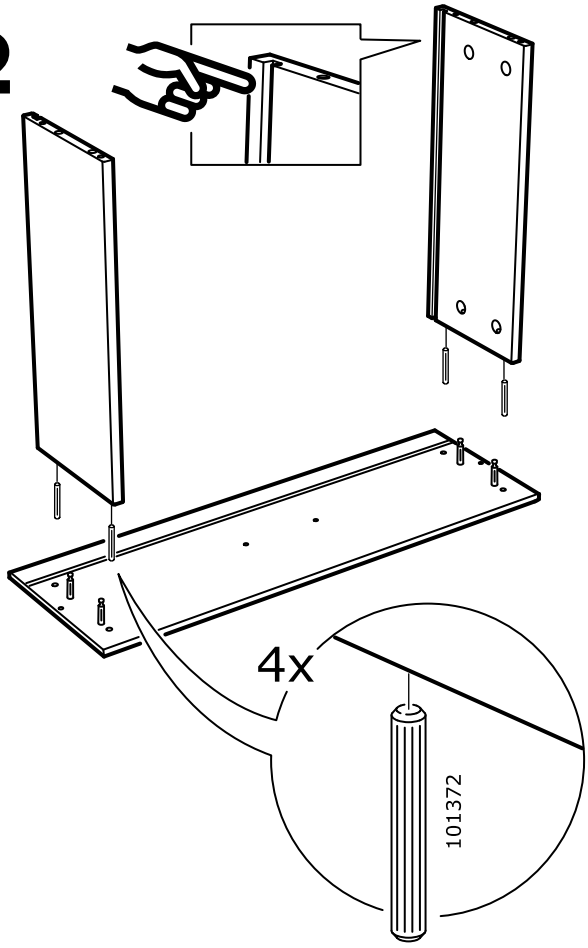

3

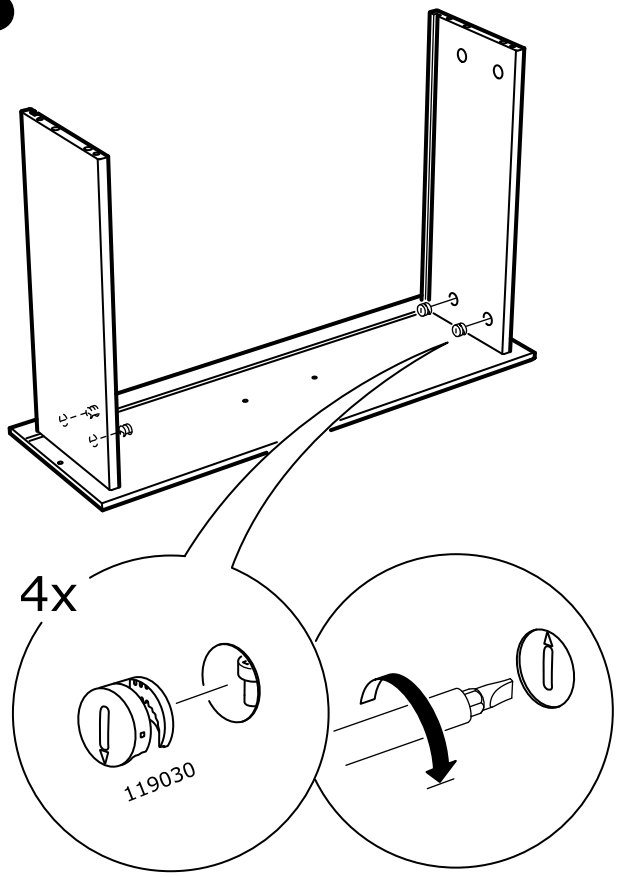

4

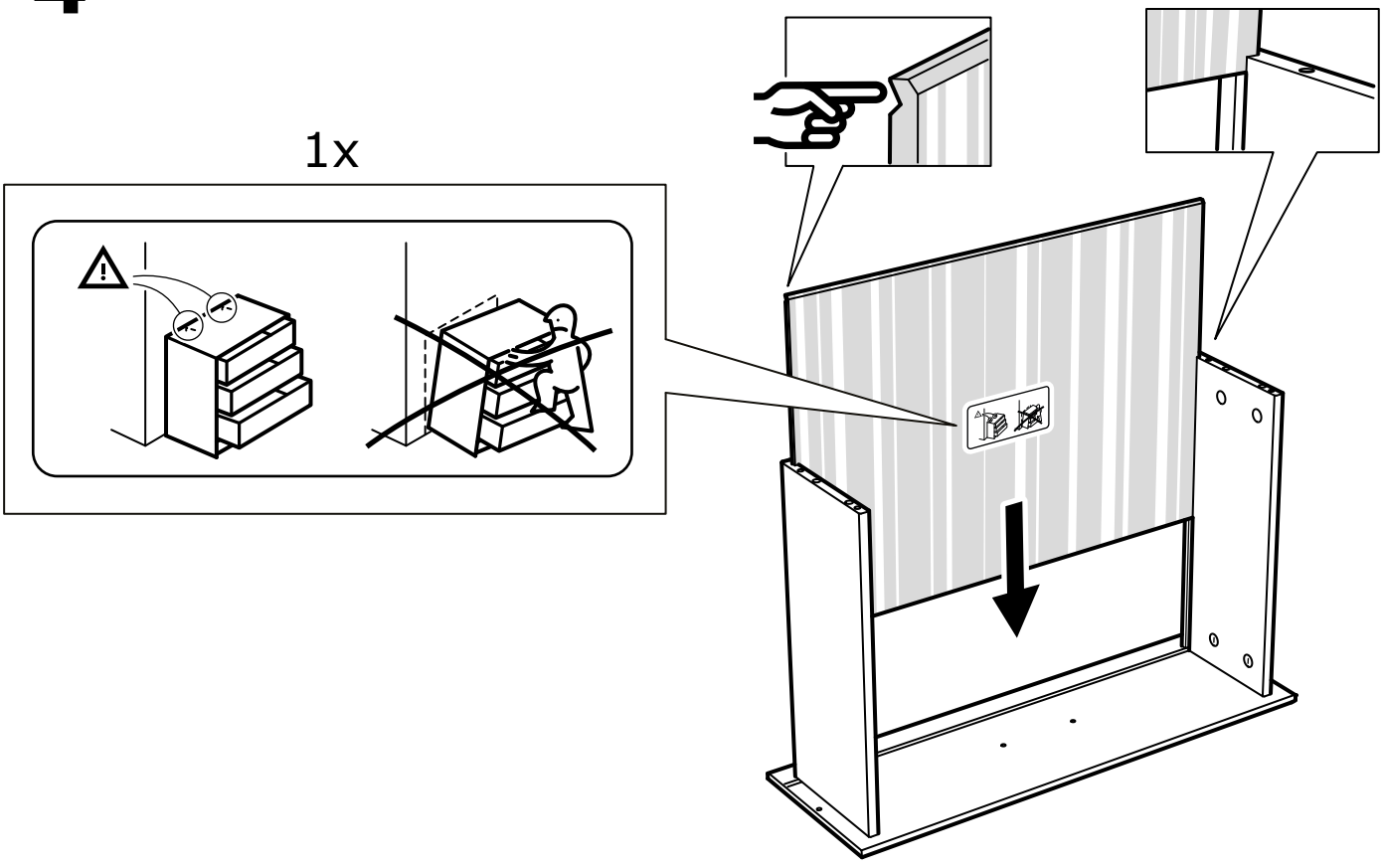

5

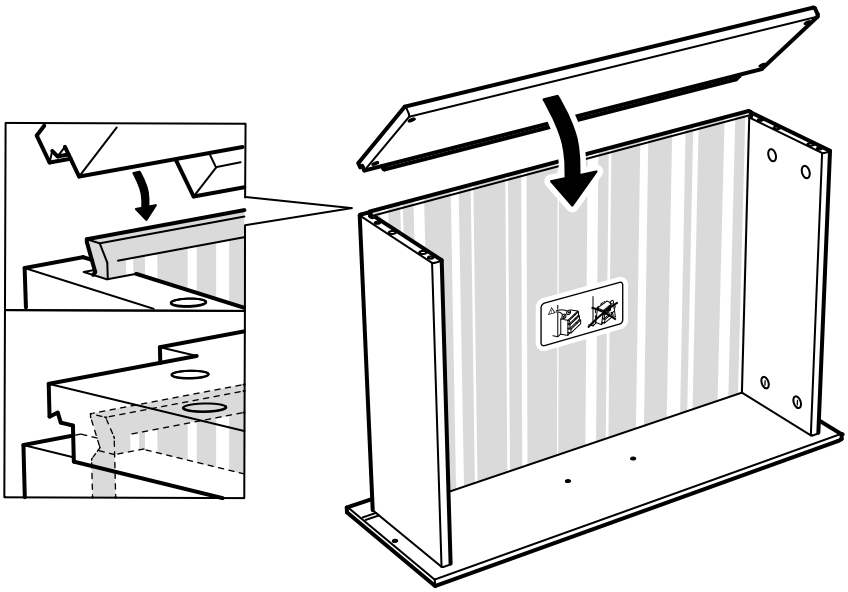

6

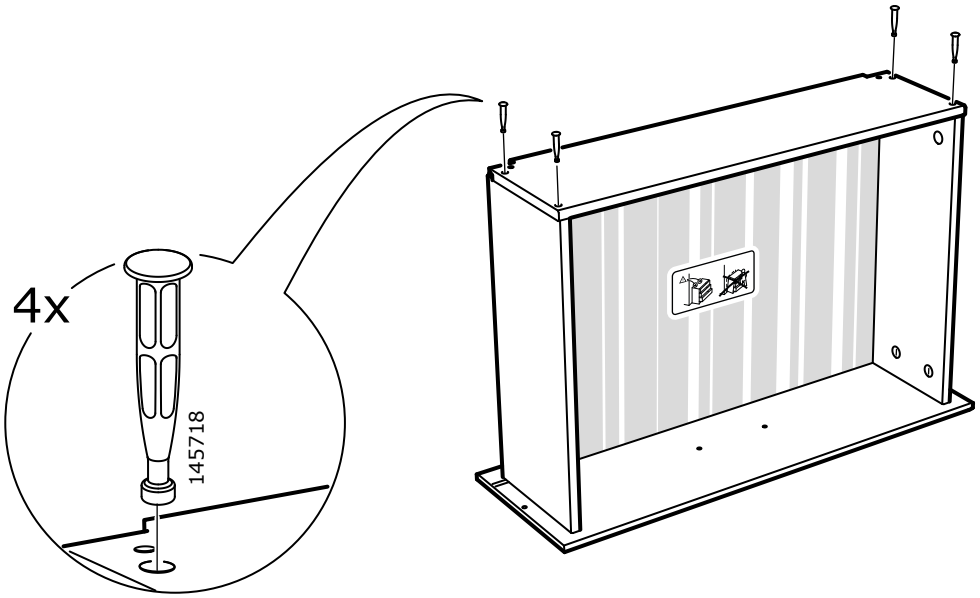

7

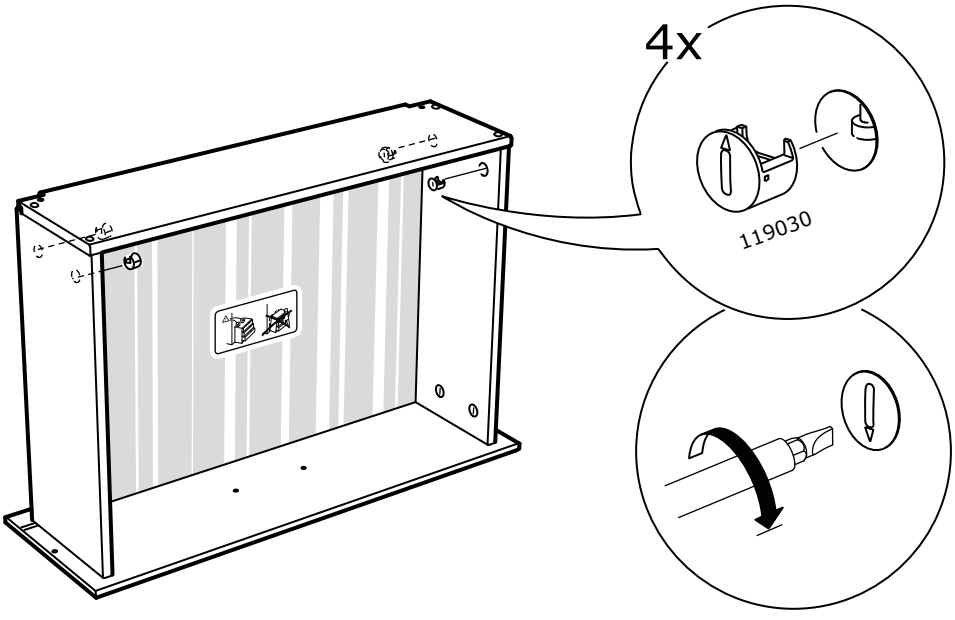

8

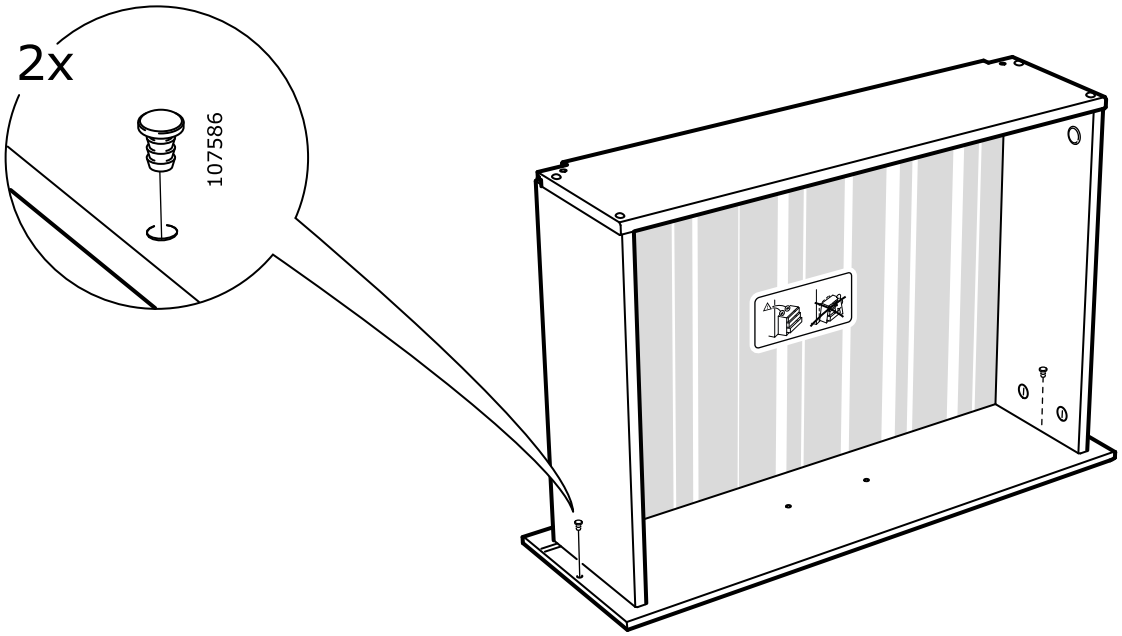

9

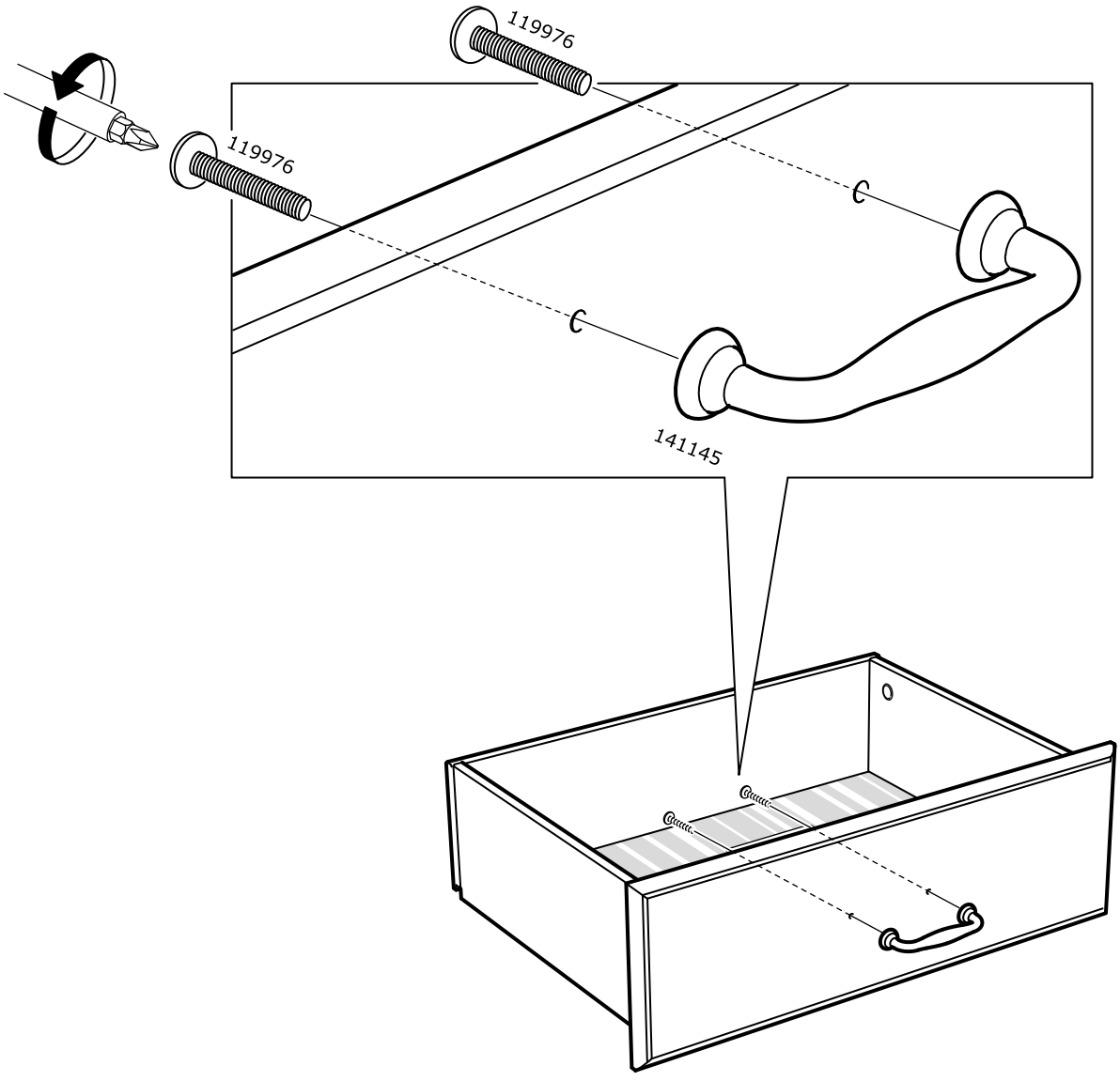

10

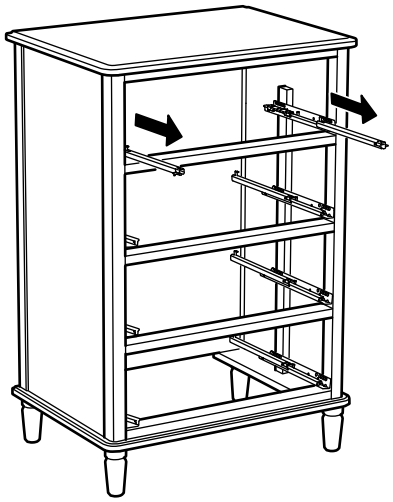

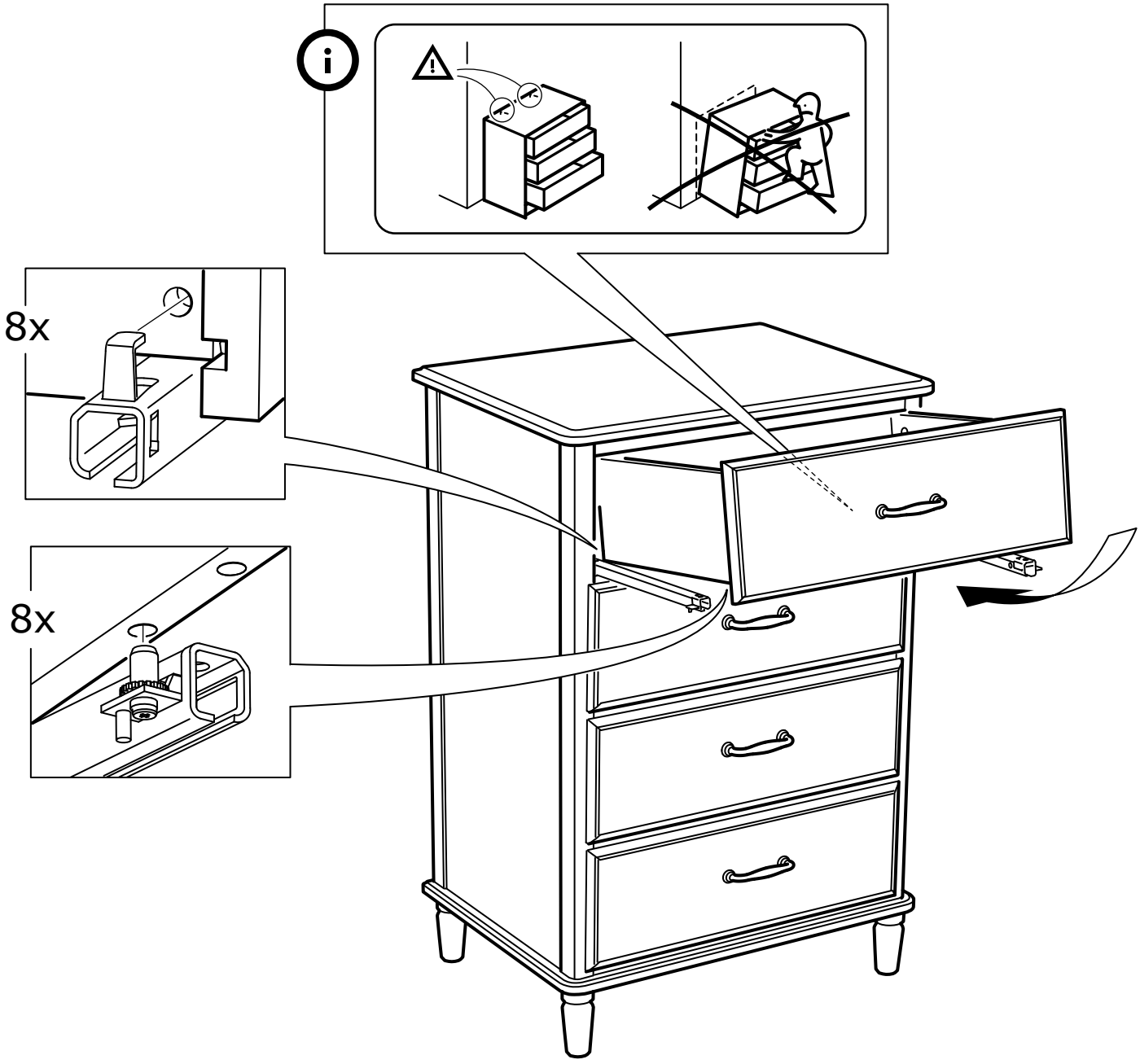

11

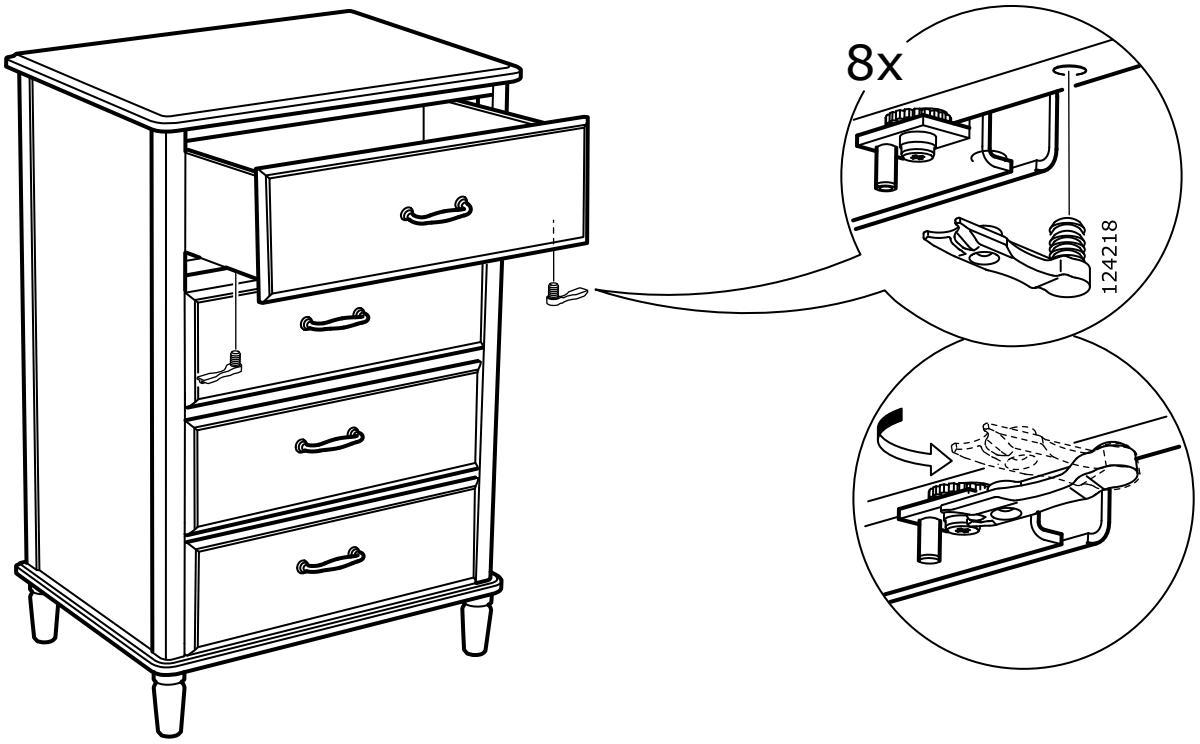

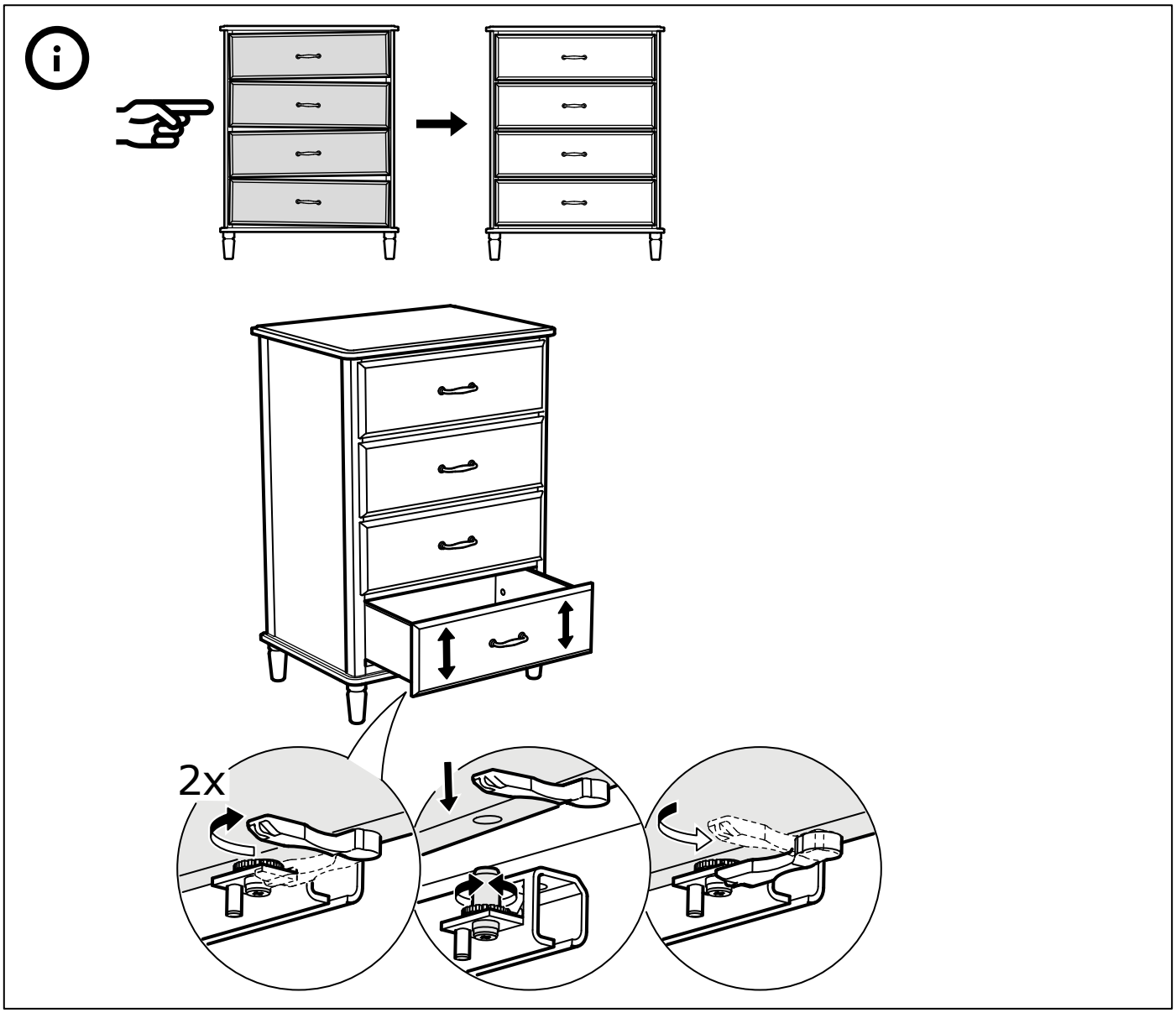

© Inter IKEA Systems B.V. 2016
2016-12-02

AA-1989668-1