LÖNSET

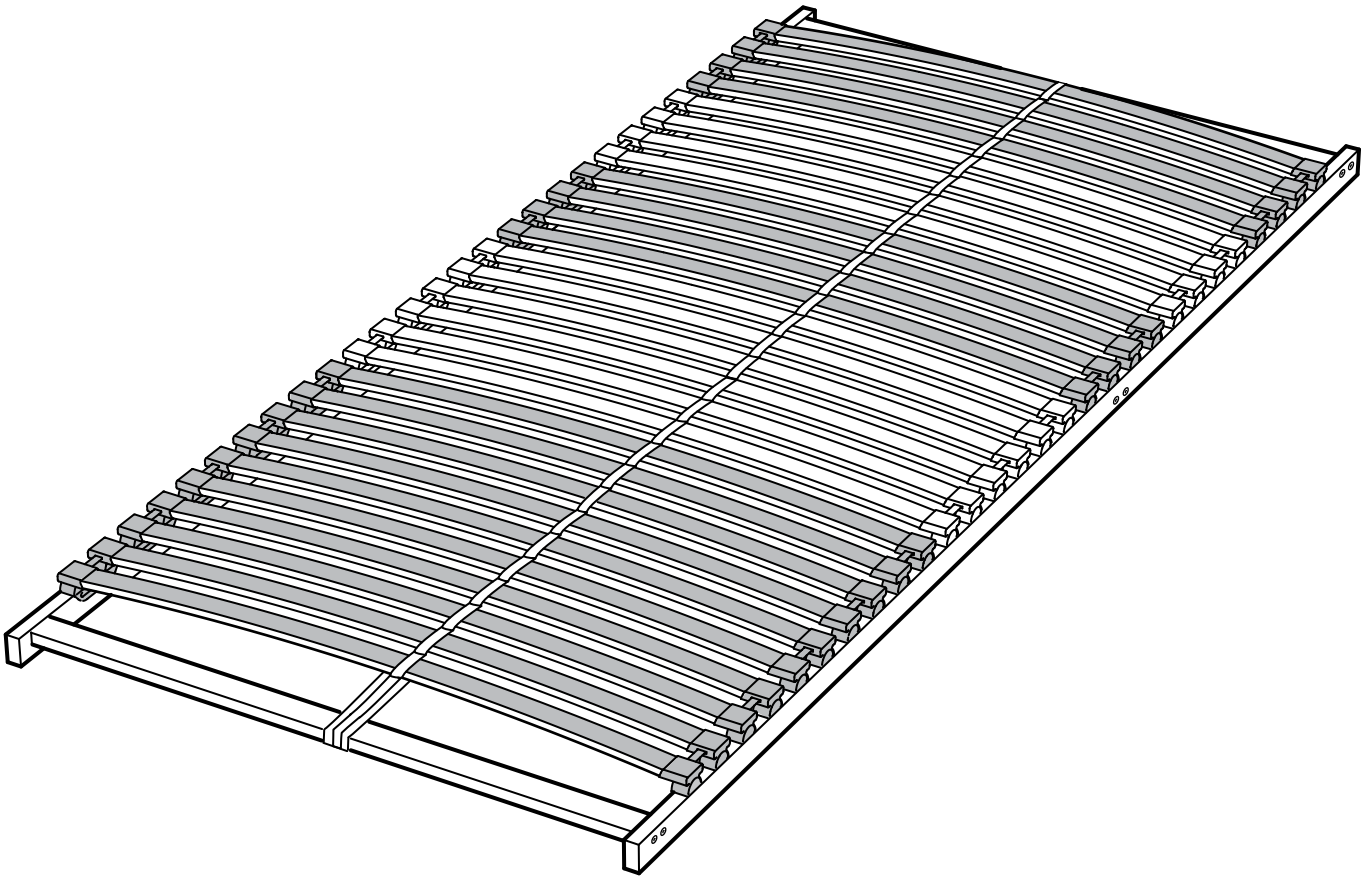

Design and Quality
IKEA of Sweden

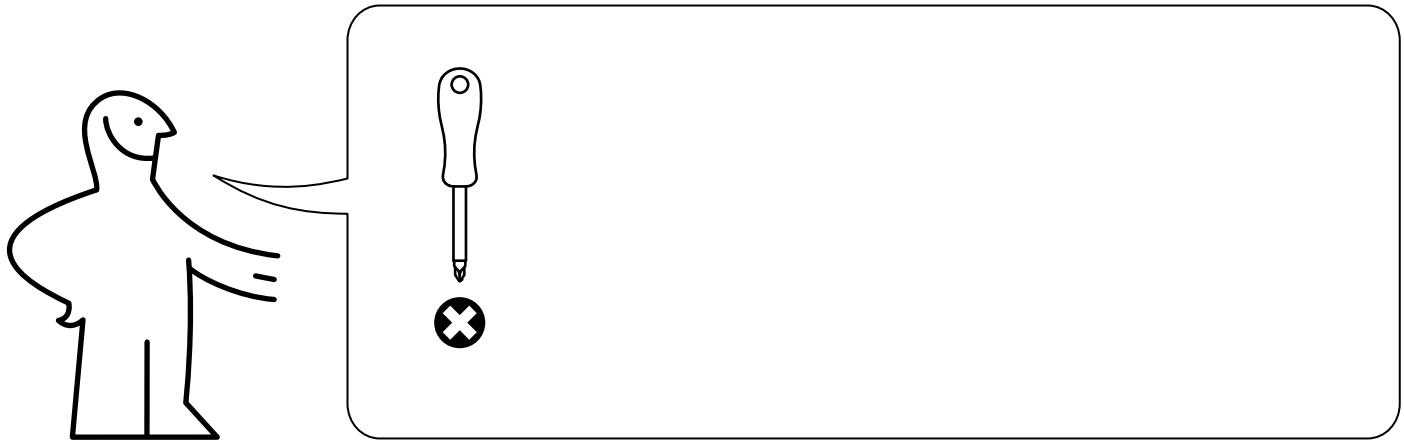

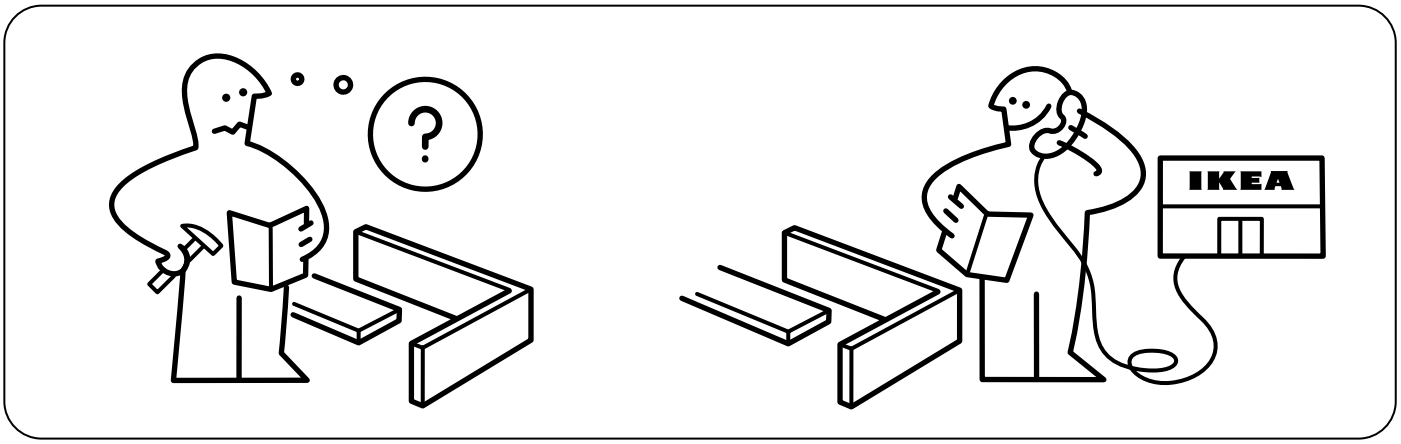
IKEA

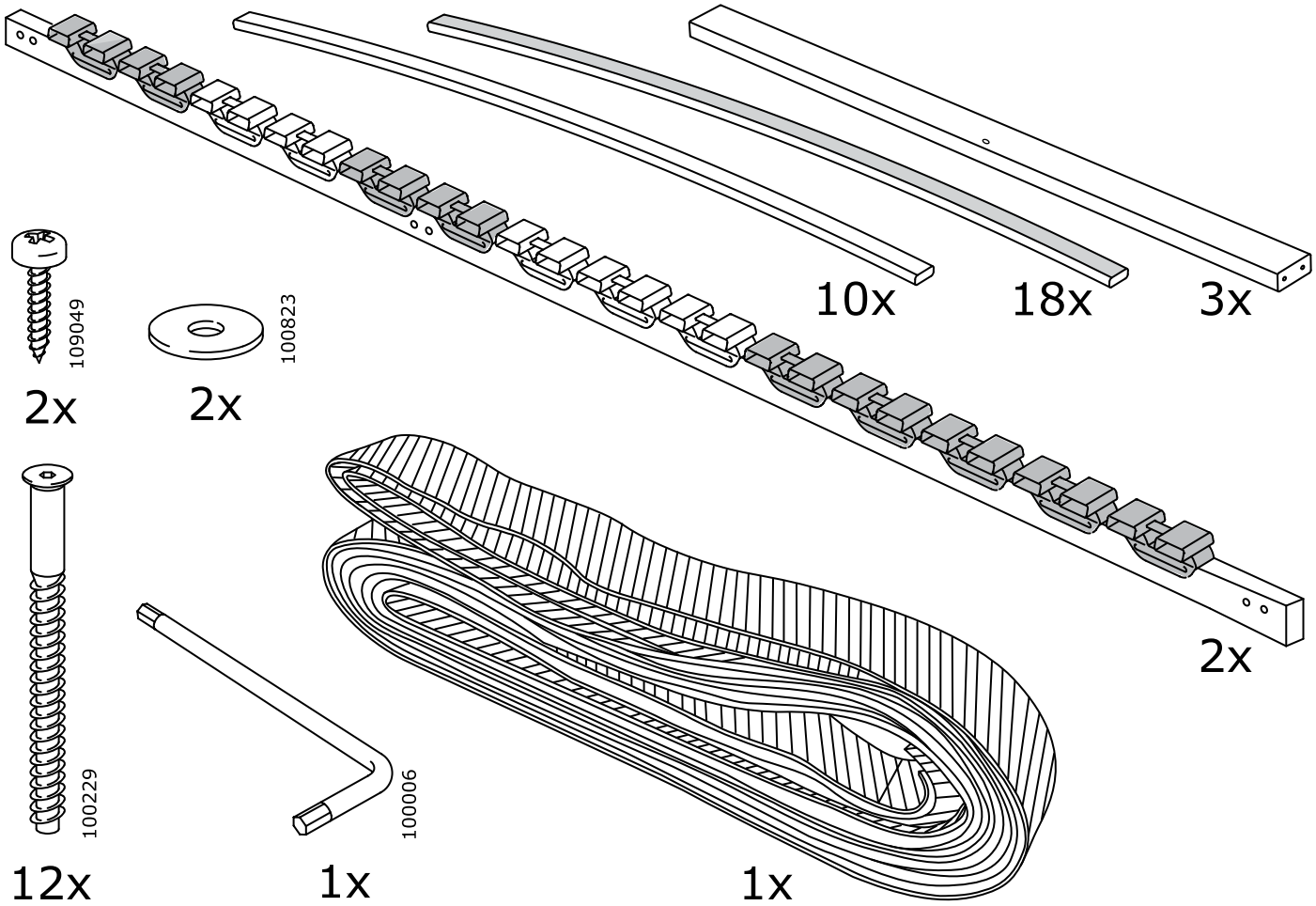
109049
2x
100823
2x
10x
18x
3x
2x
100229
12x
100006
1x
1x

1

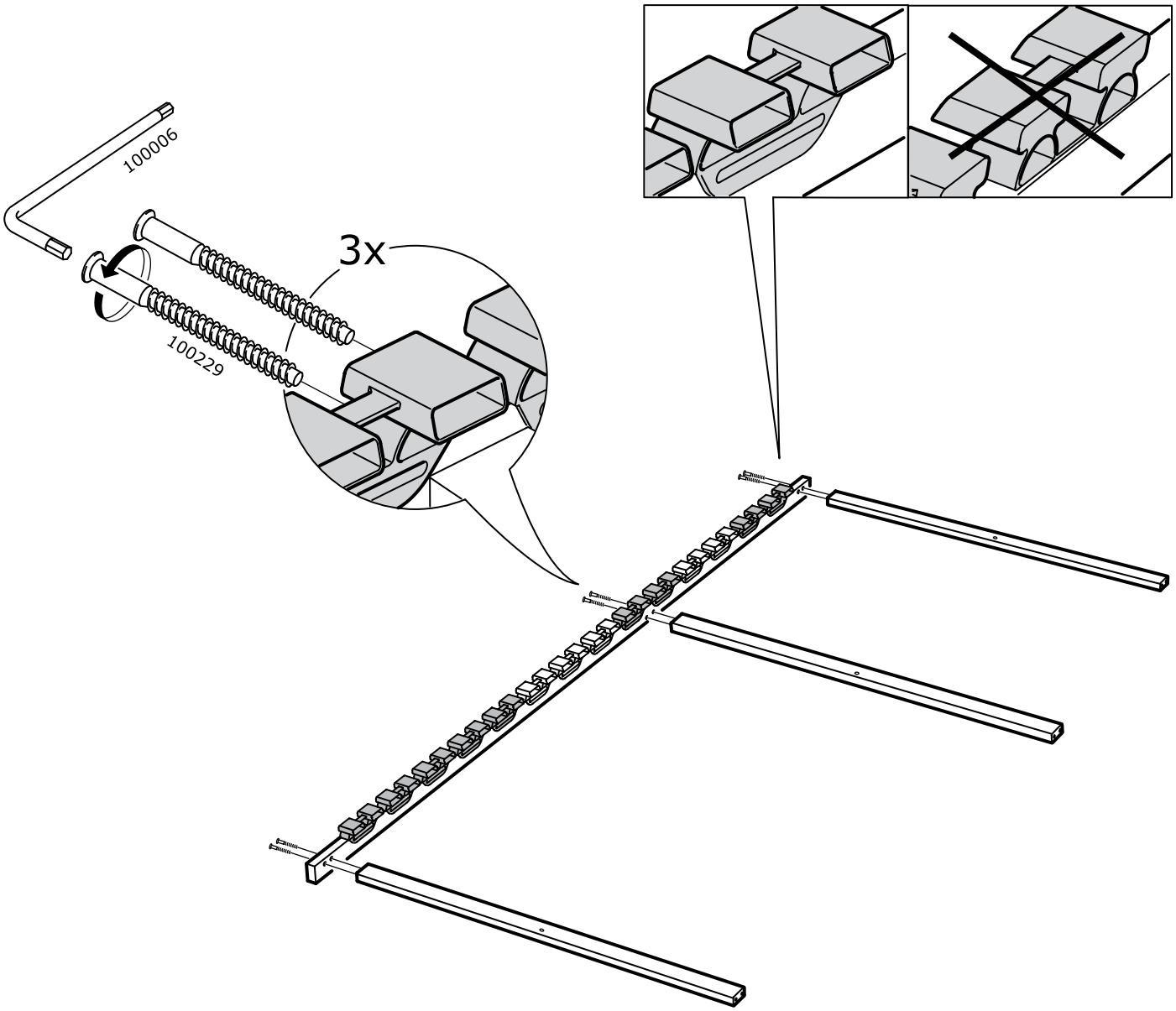

2

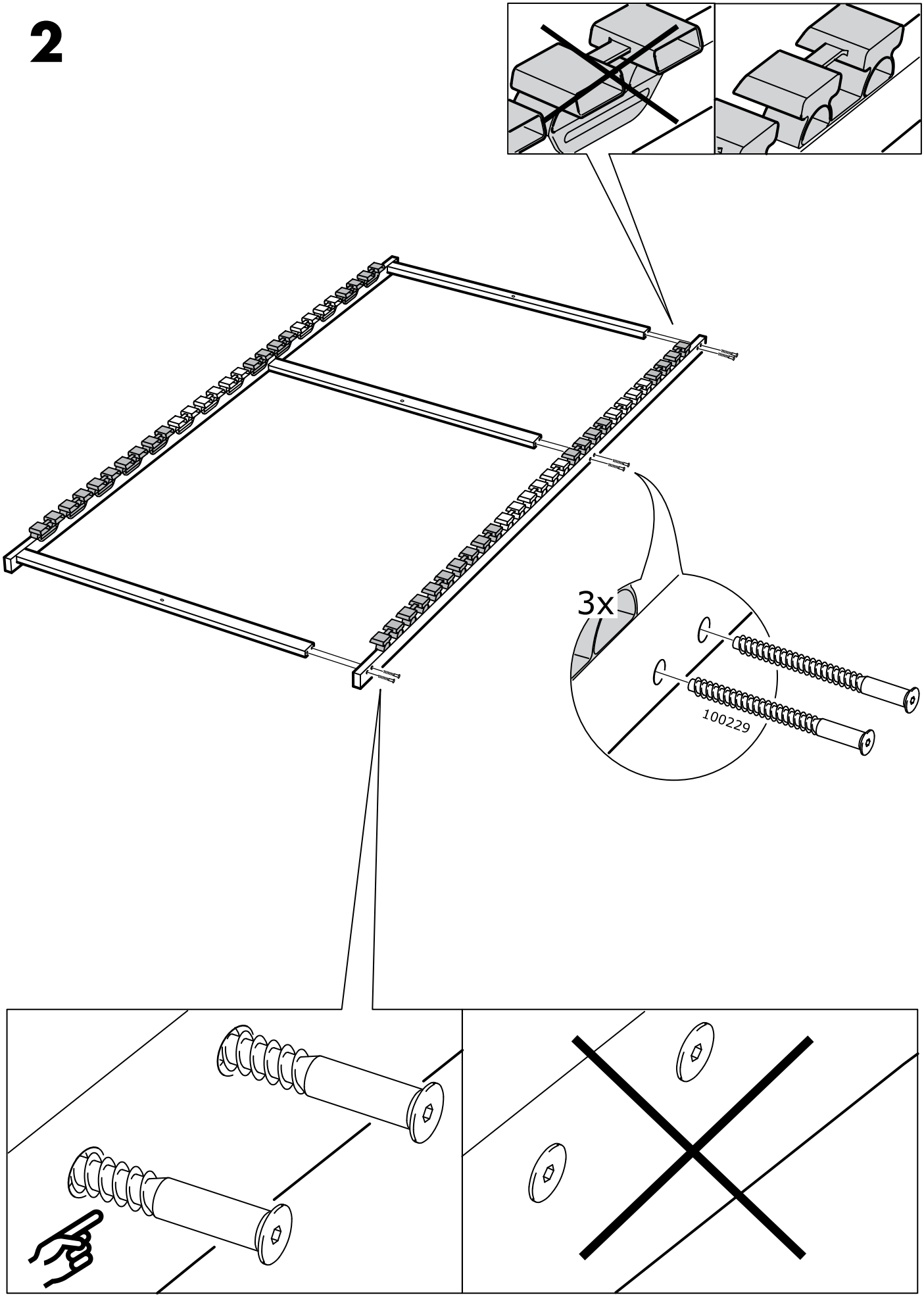

3

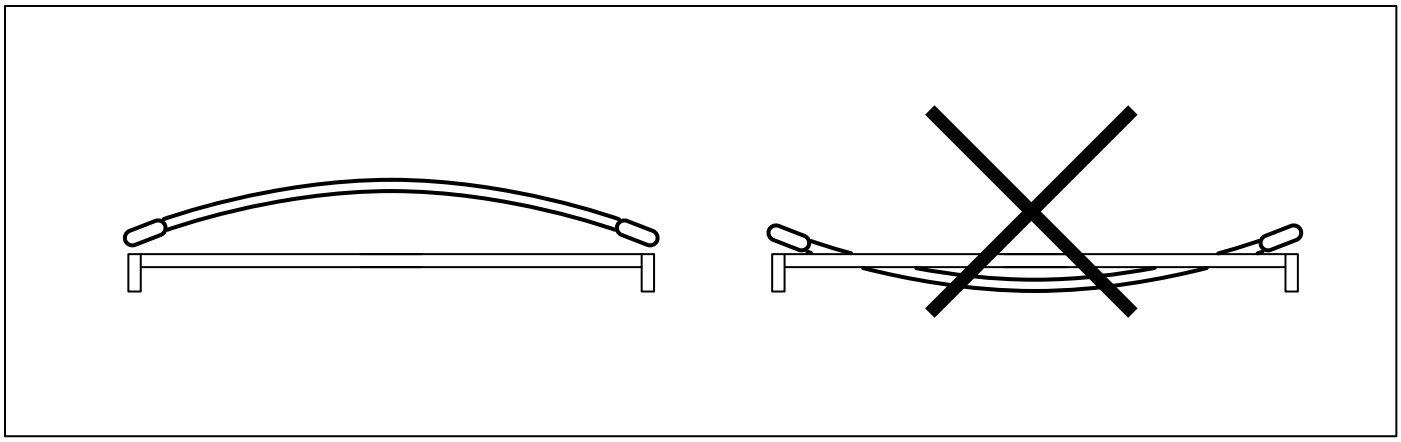

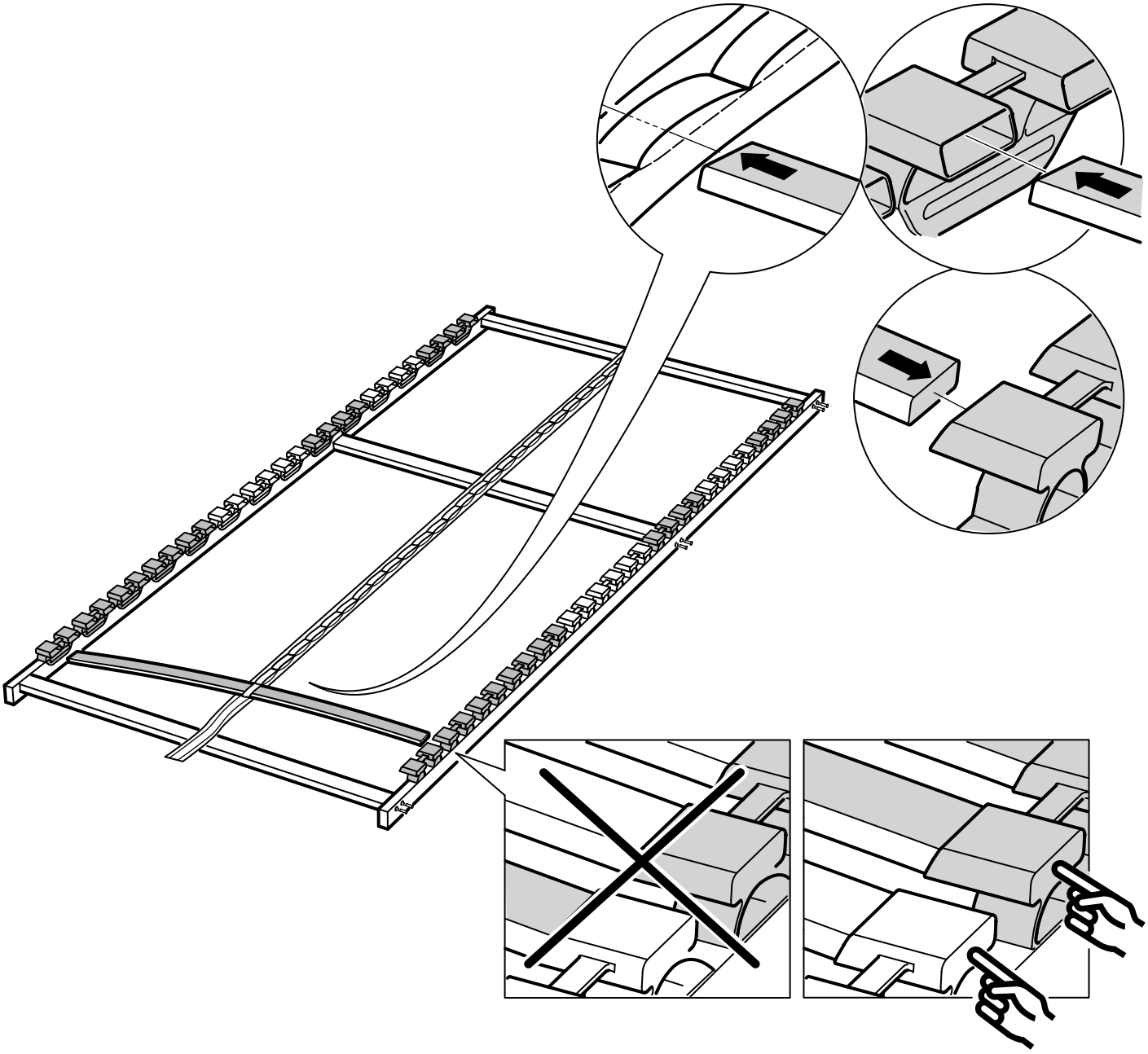

4

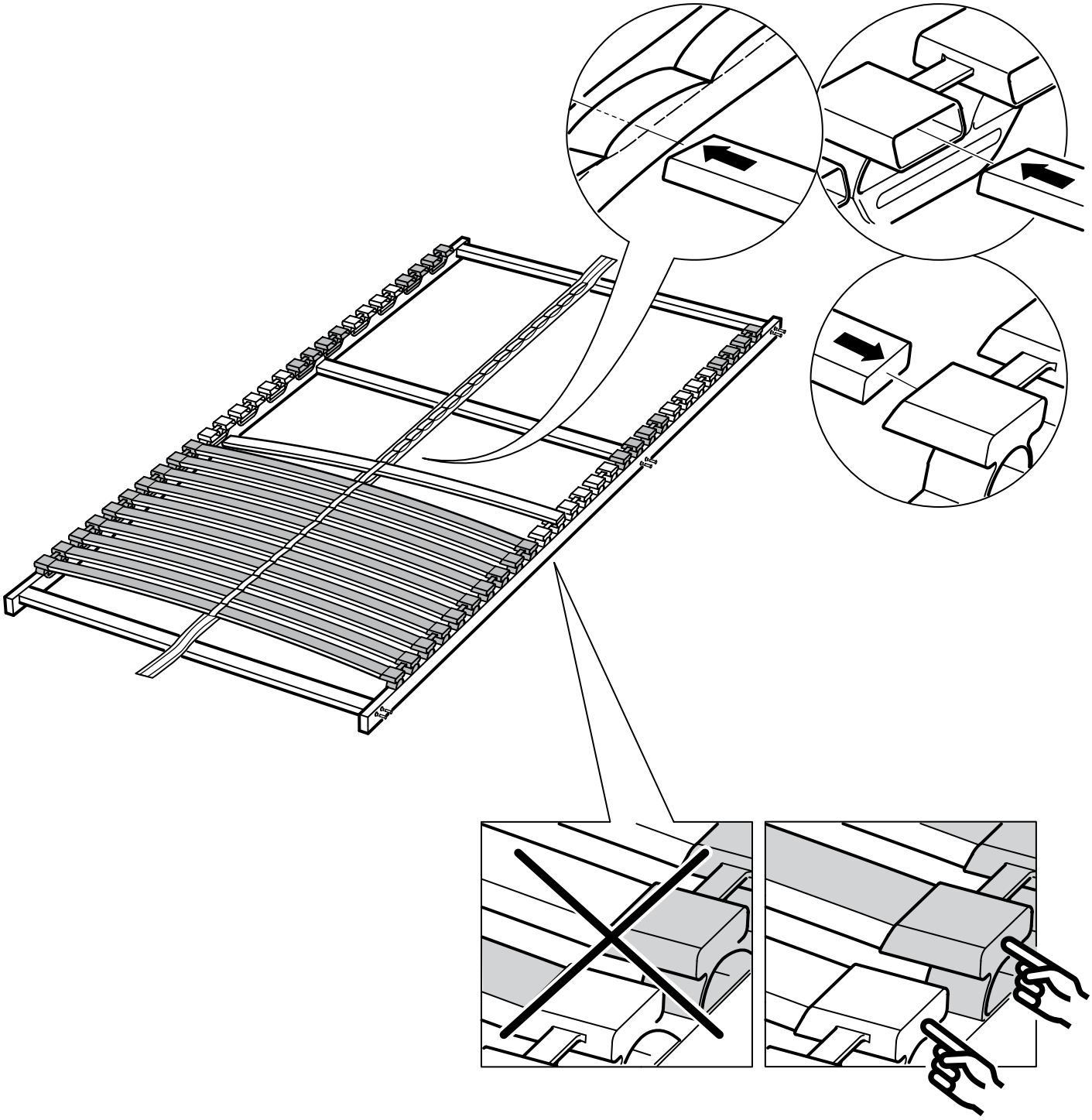

5

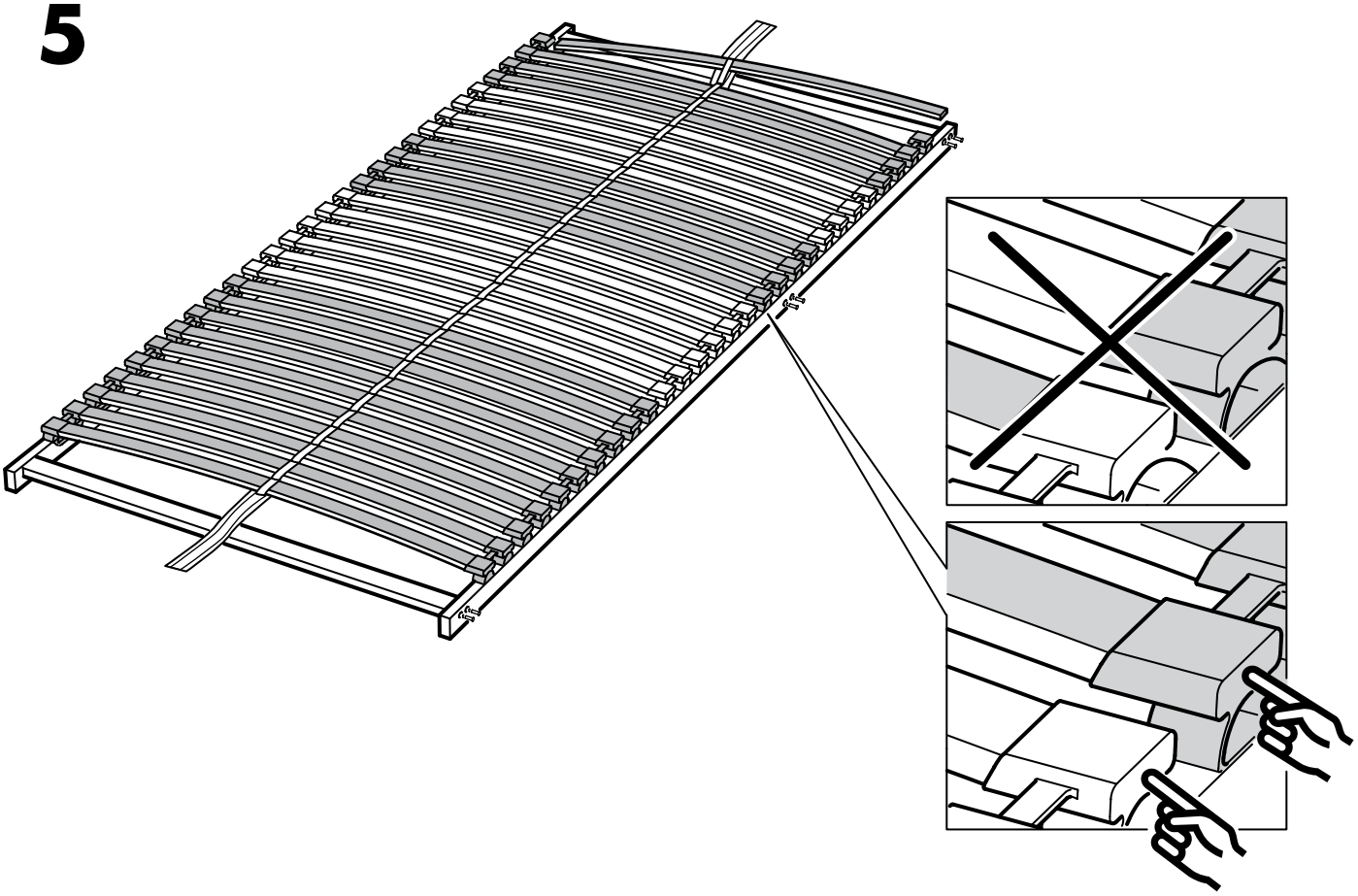

6

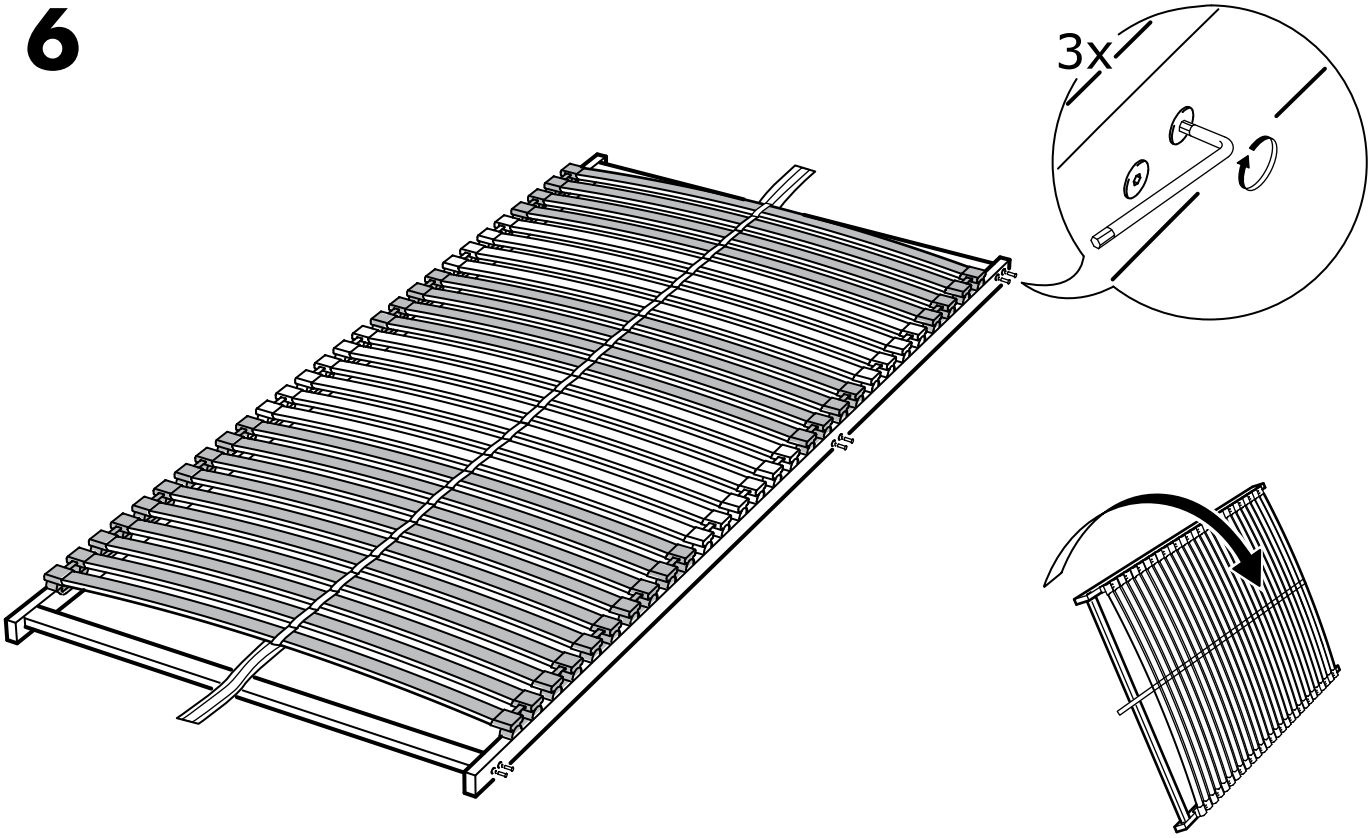

7

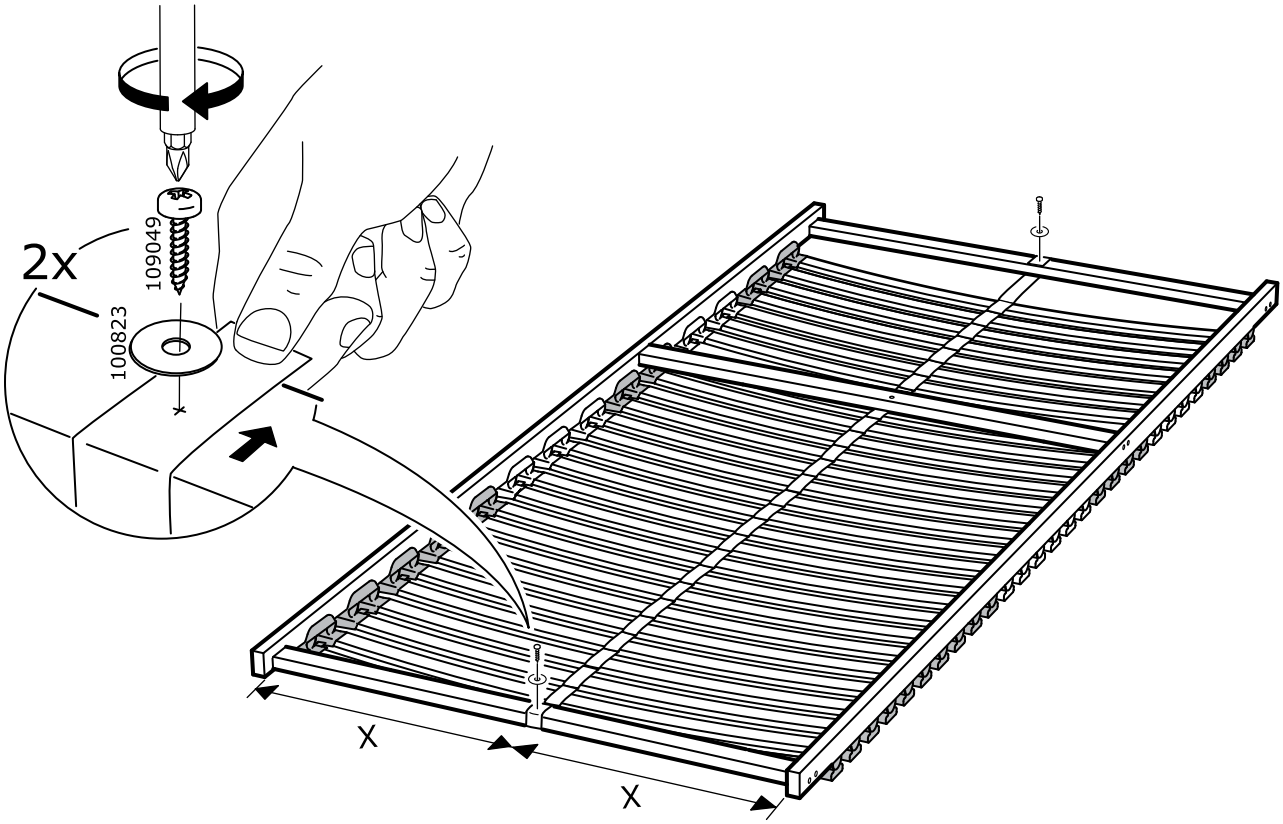

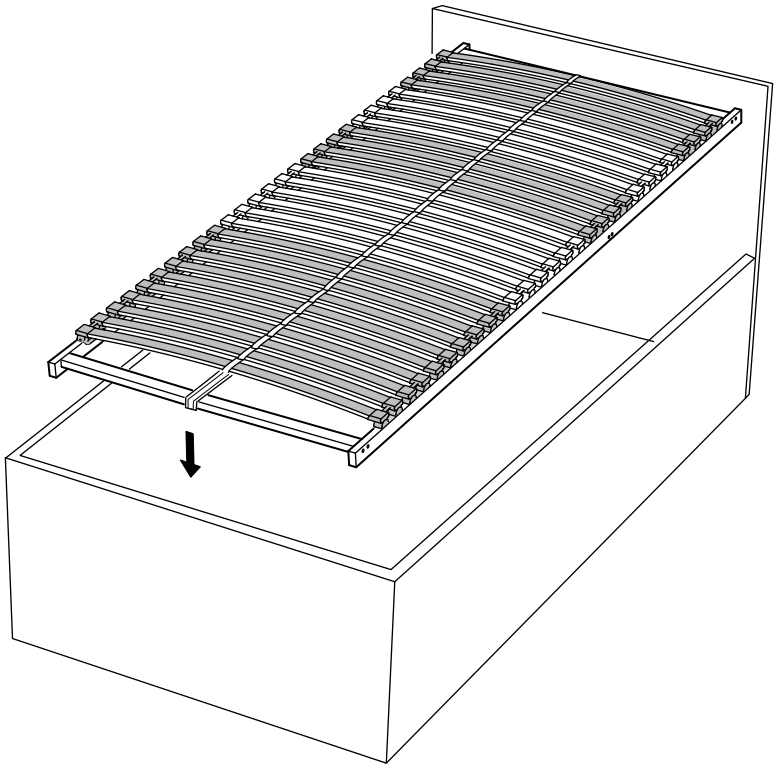

© Inter IKEA Systems B.V. 2015