SUNNERSTA

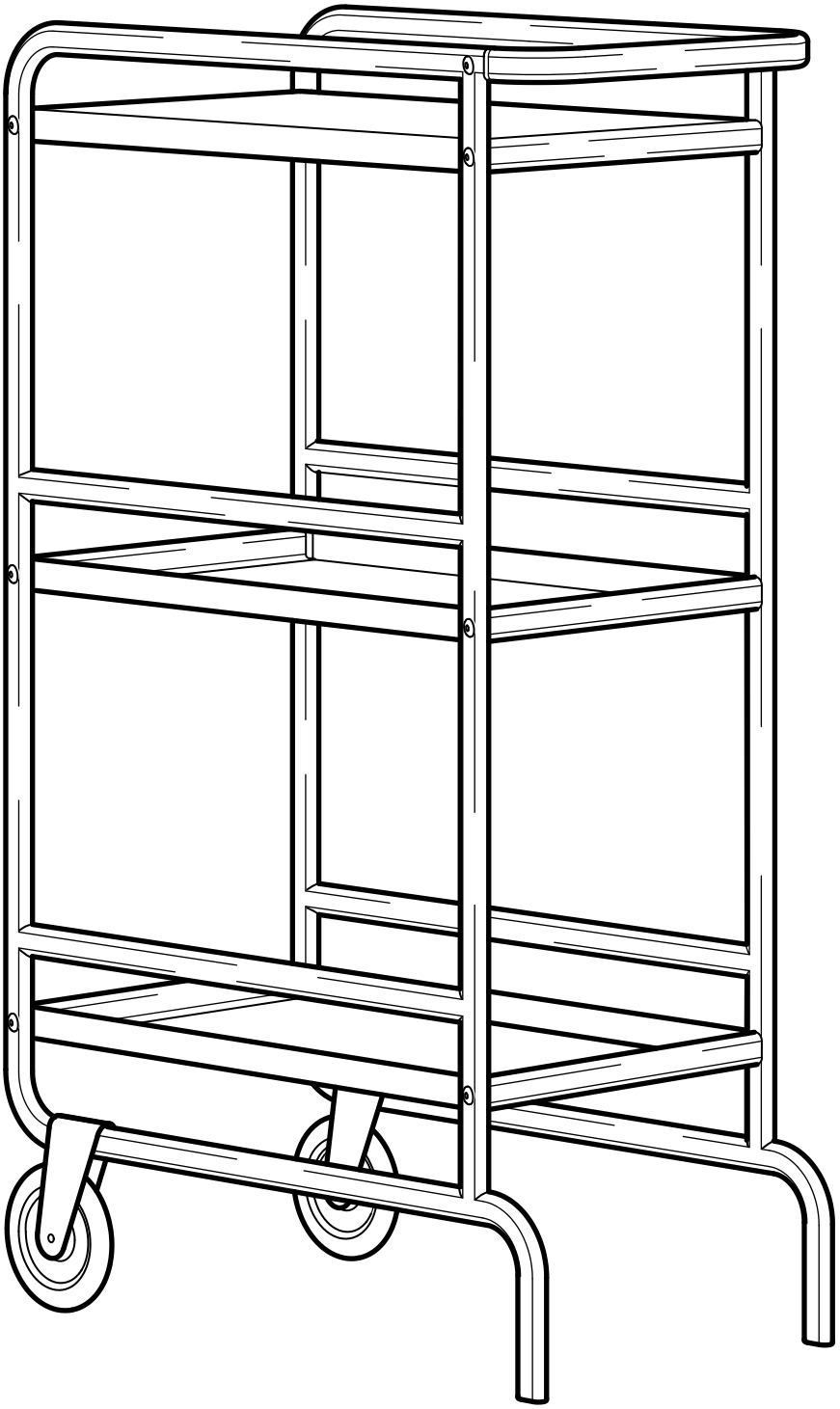

Design and Quality
IKEA of Sweden

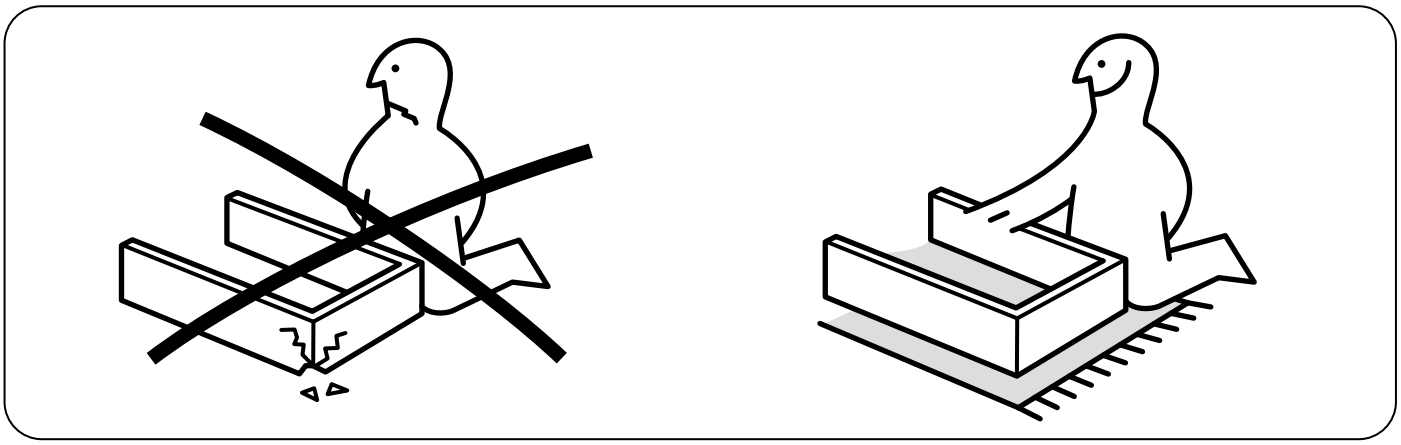

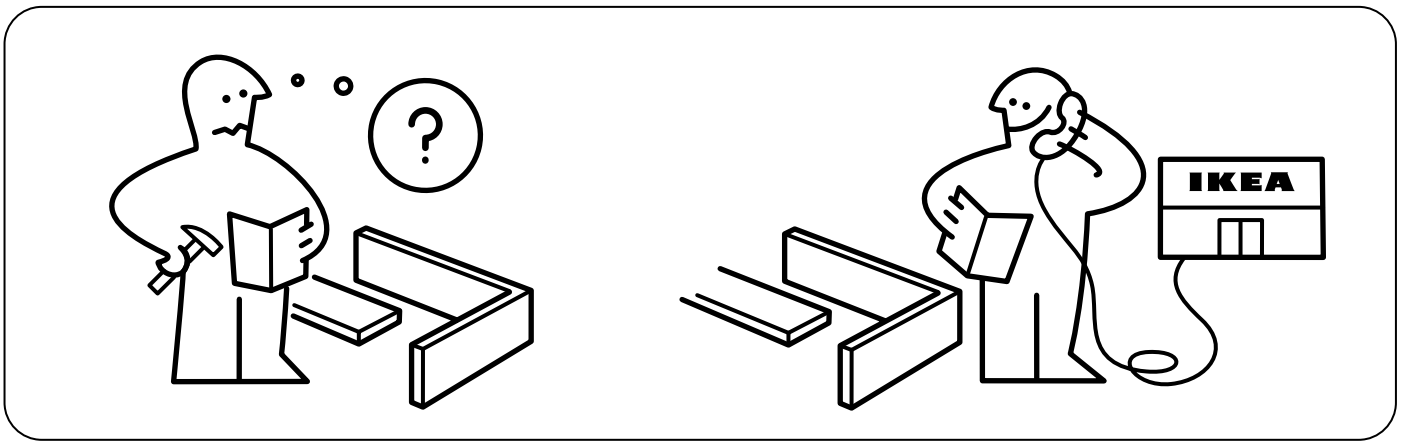

2x

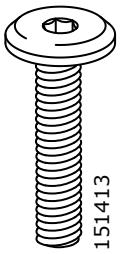

12x

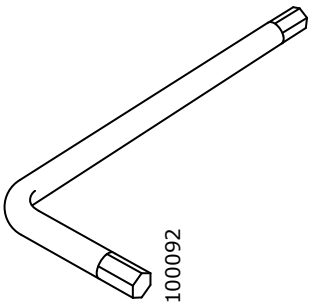

1x

1

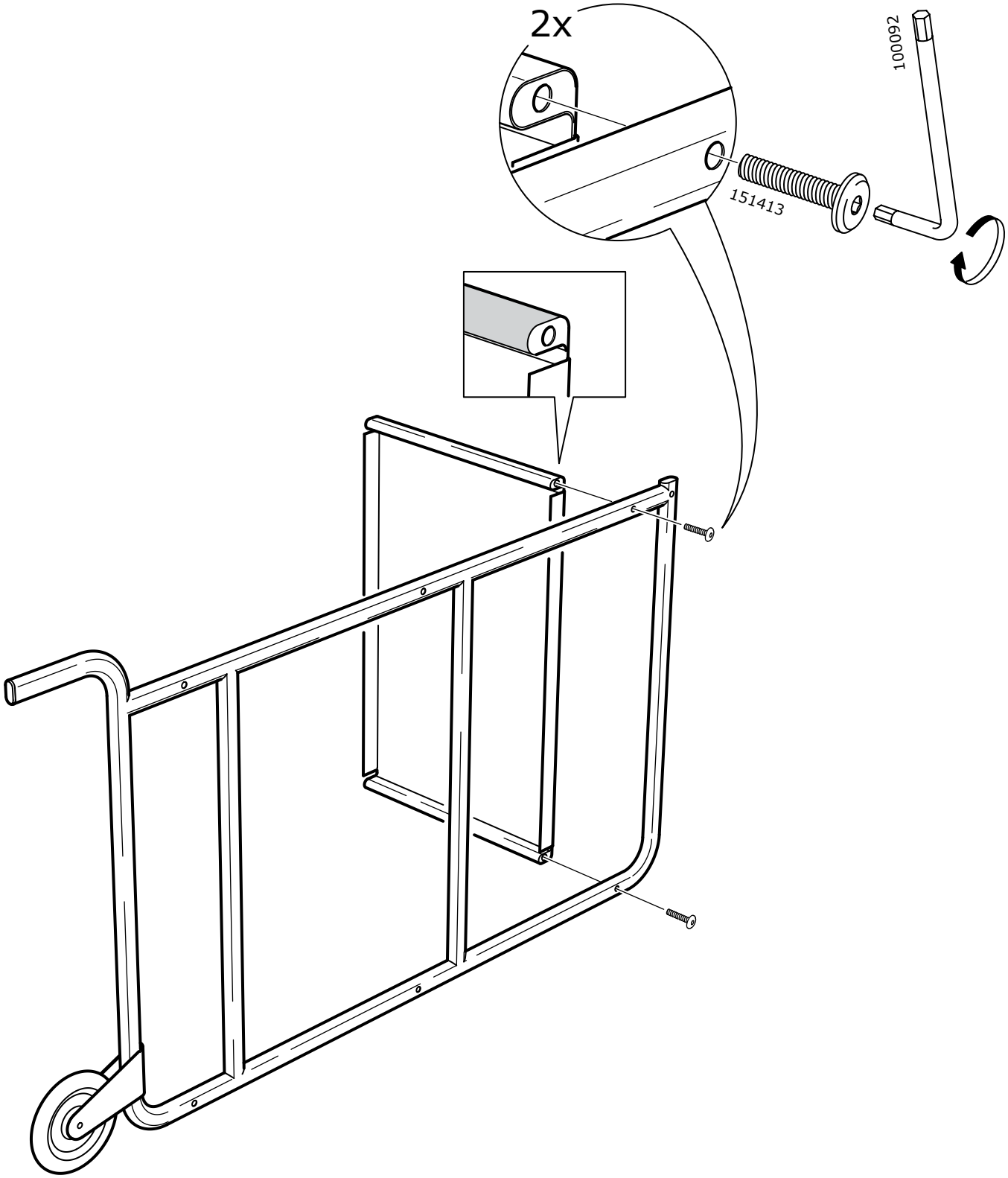

2

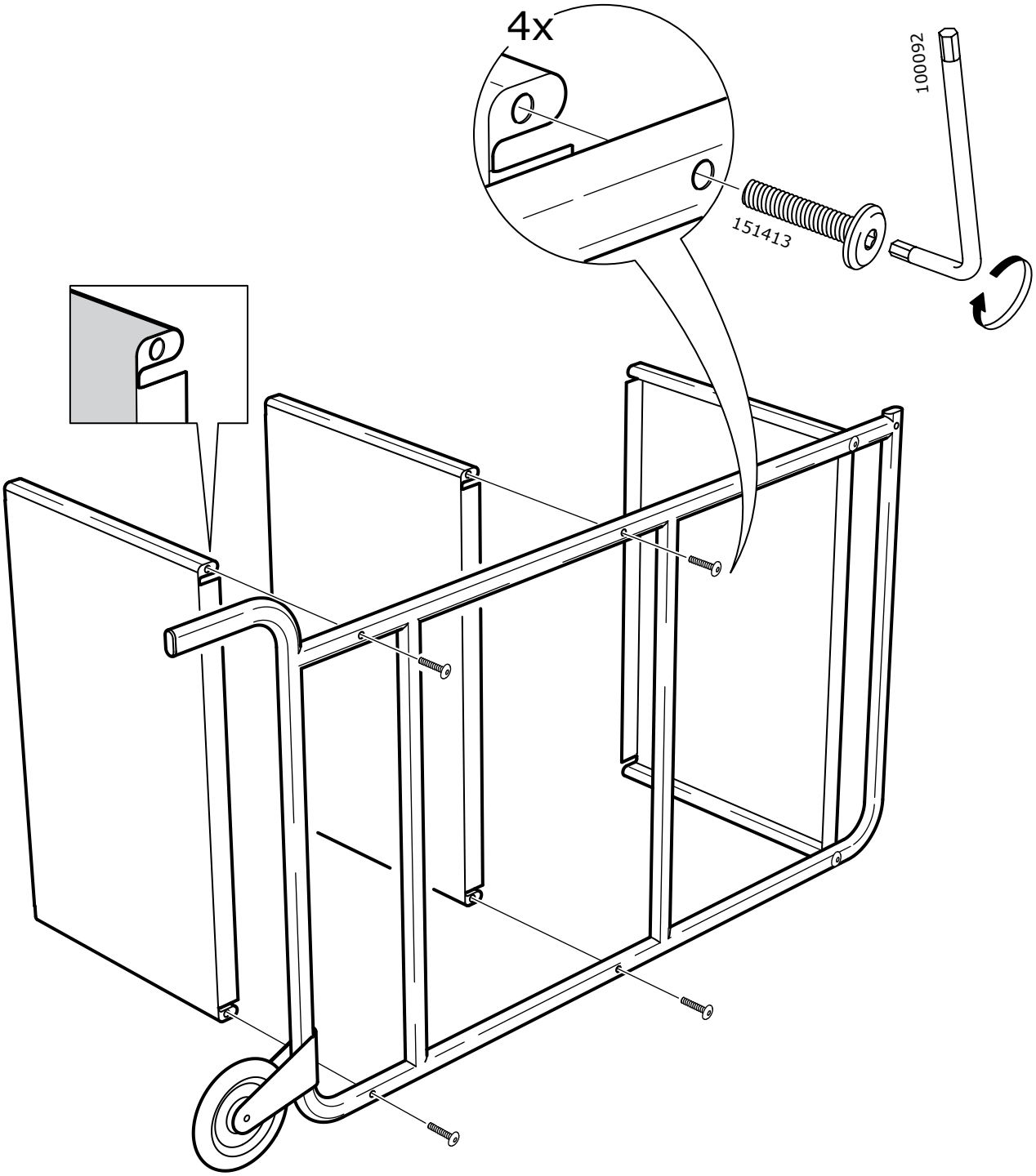

3

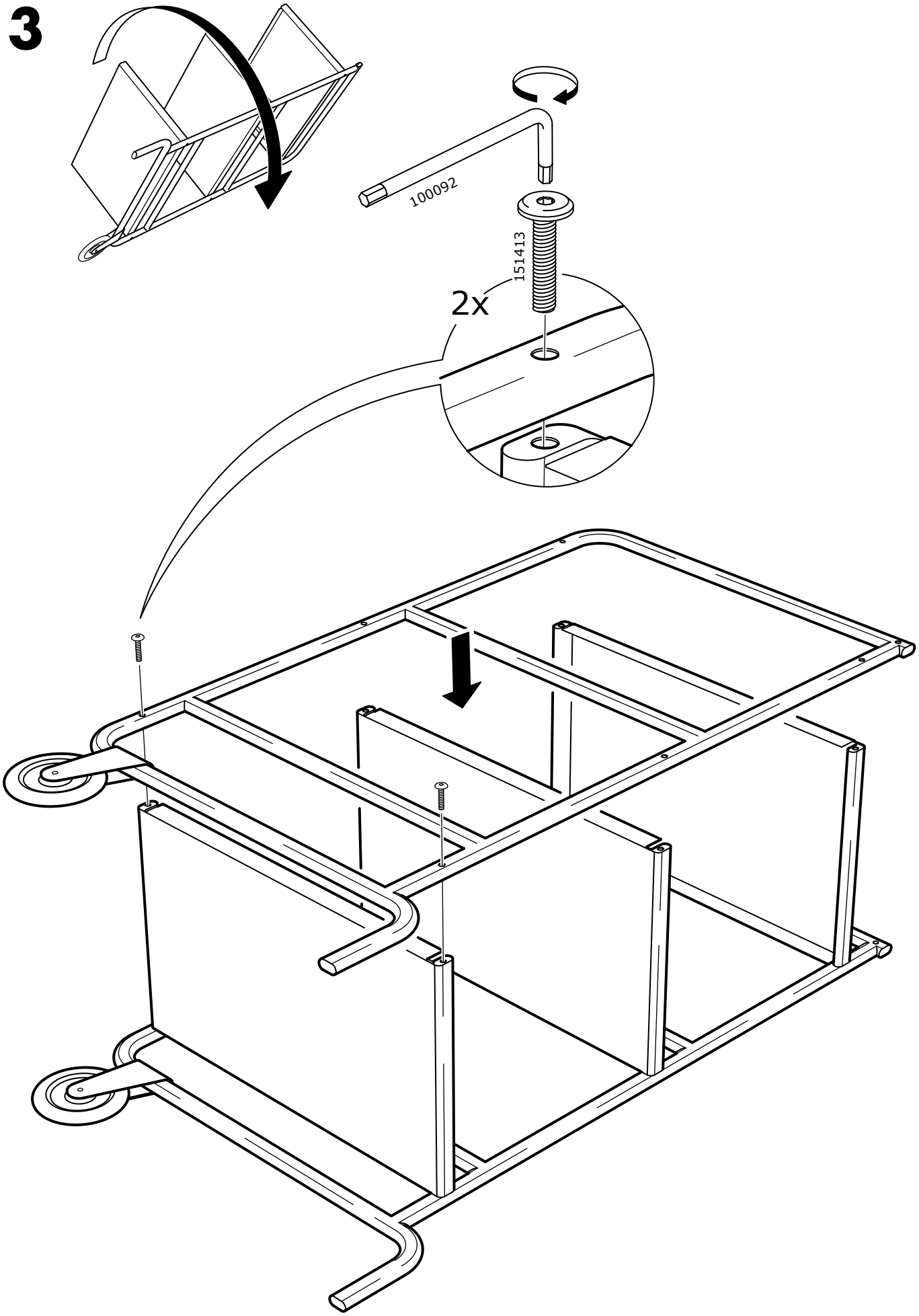

4

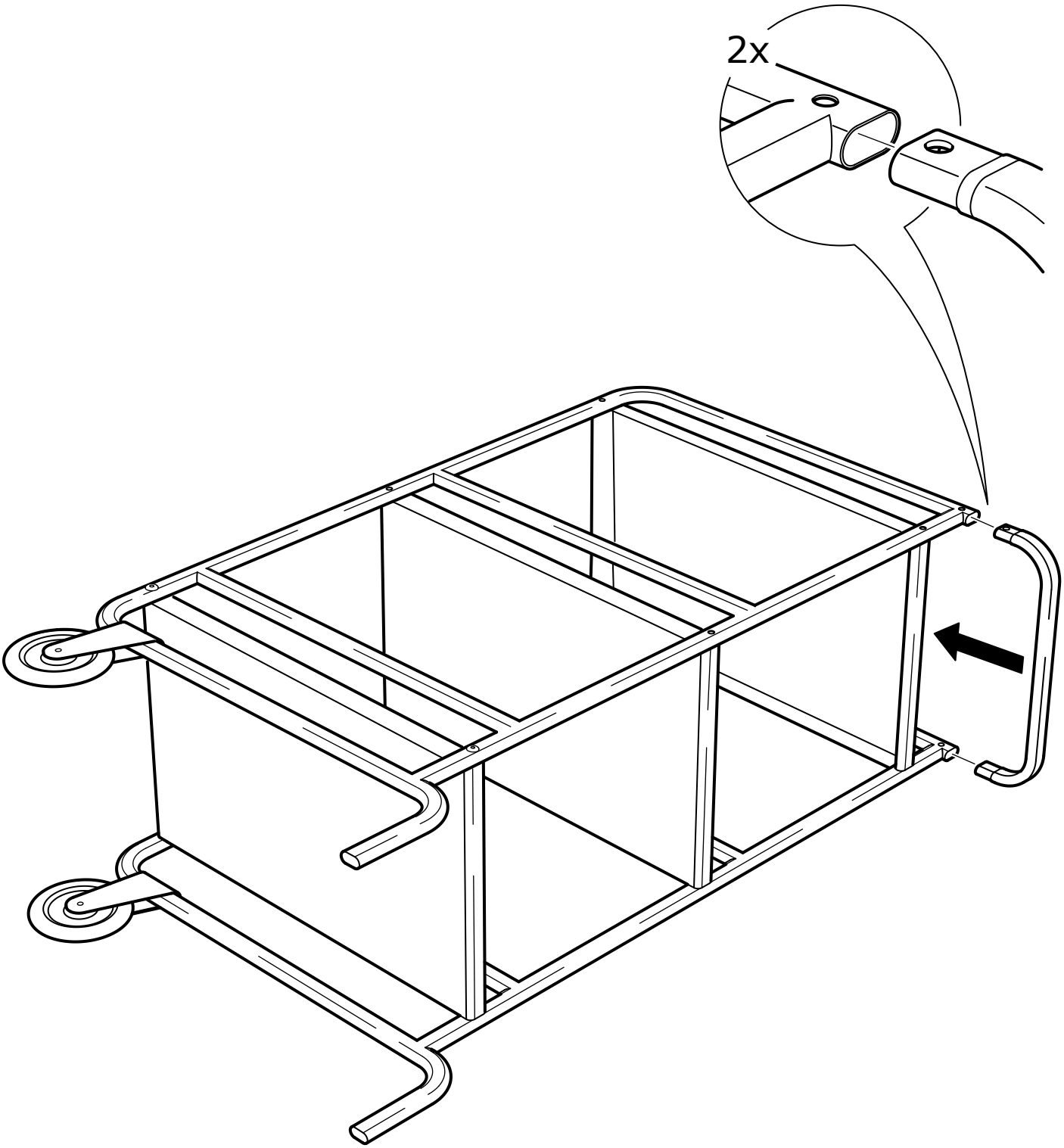

5

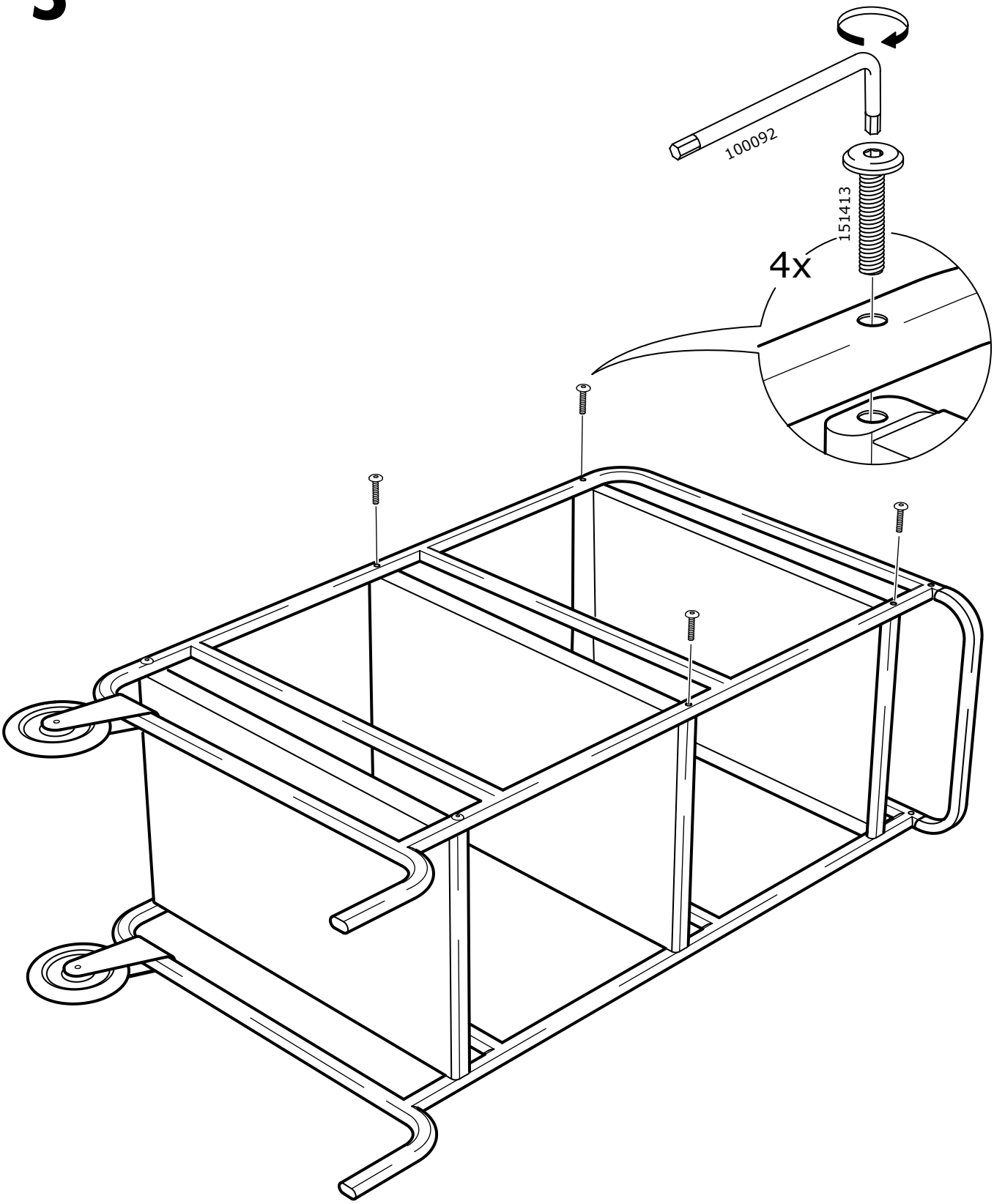

6

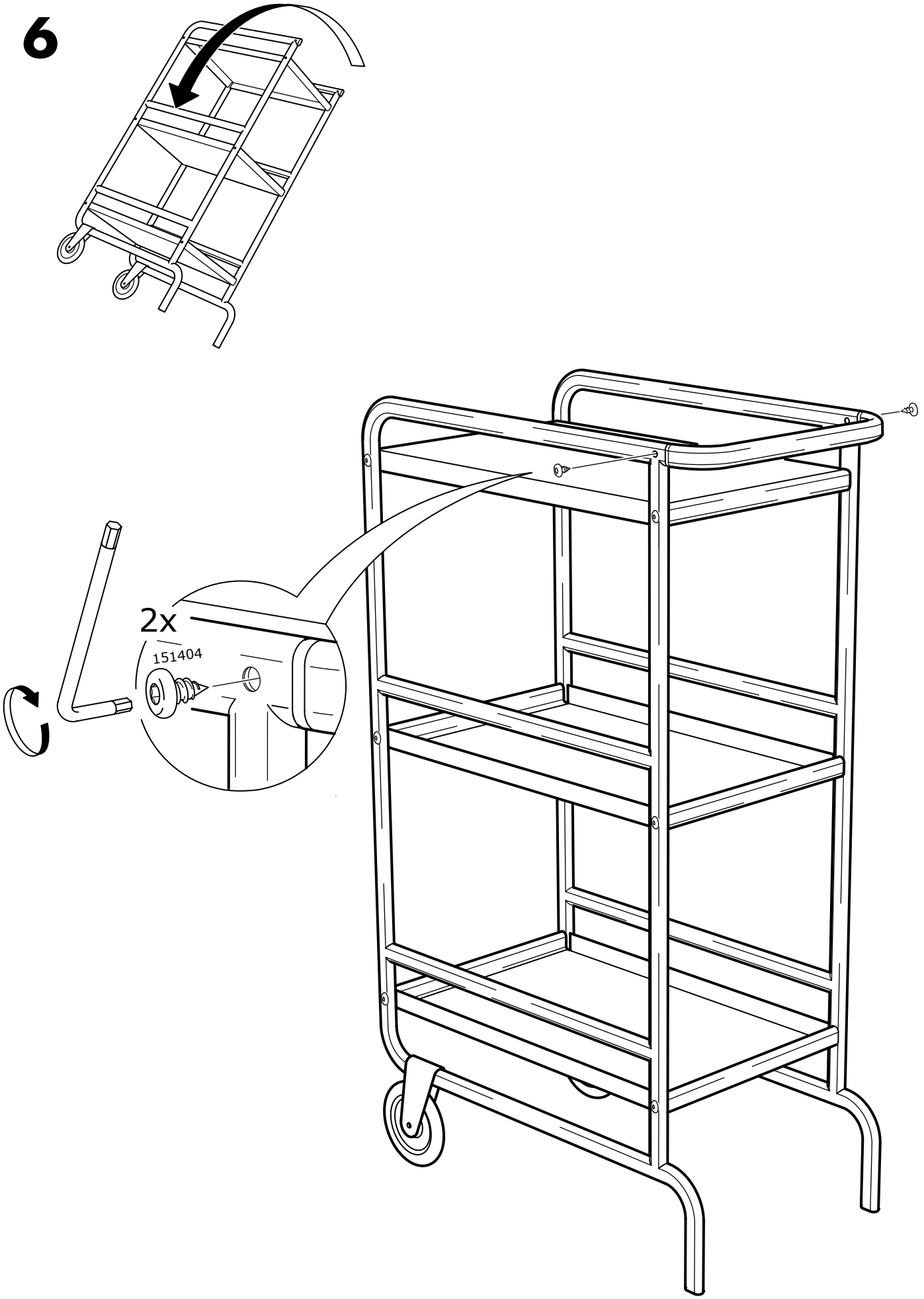

© Inter IKEA Systems B.V. 2015