# VINDALSÖ

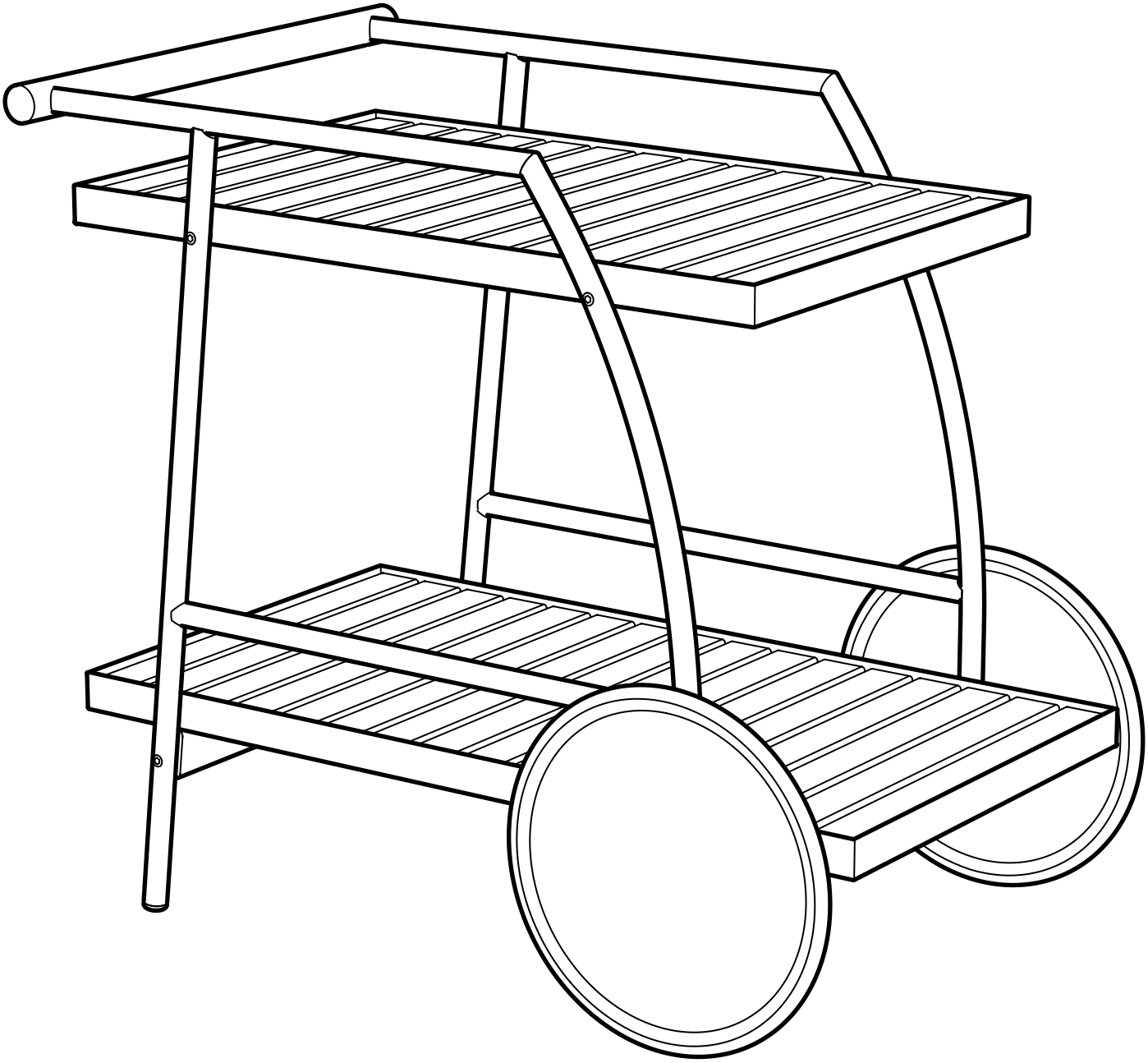

Design and Quality
IKEA of Sweden

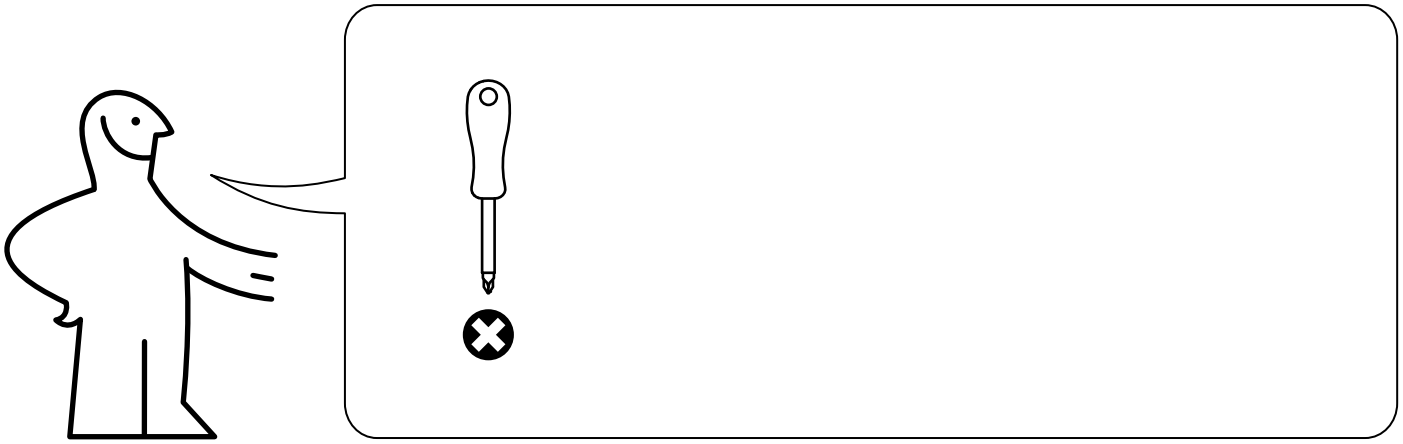

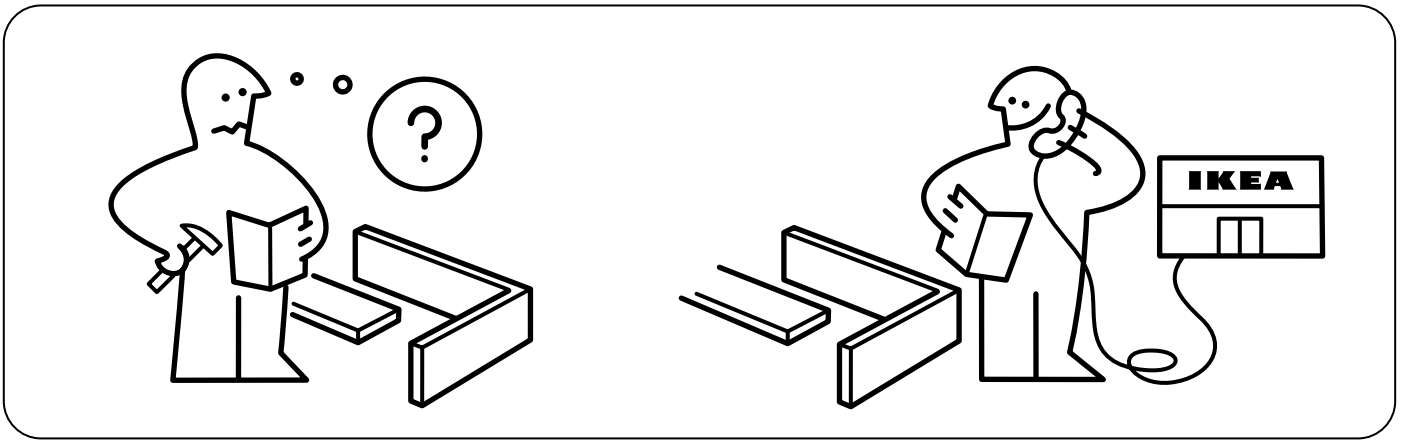
IKEA

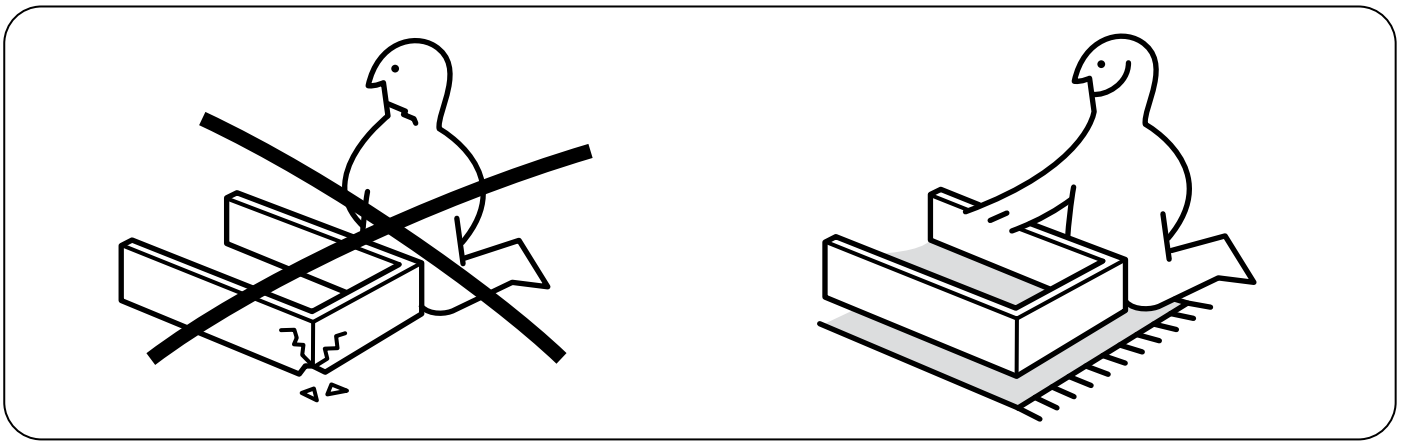

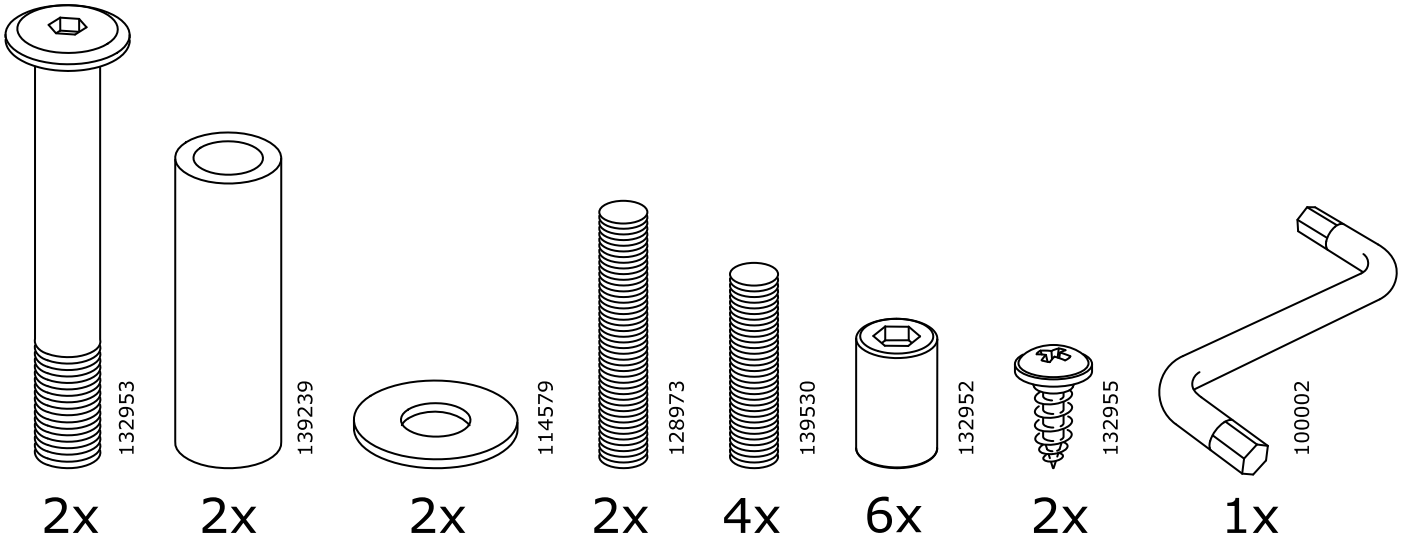
132953
139239
114579
128973
139530
132952
132955
100002
2x
2x
2x
2x
4x
6x
2x
1x

# 1

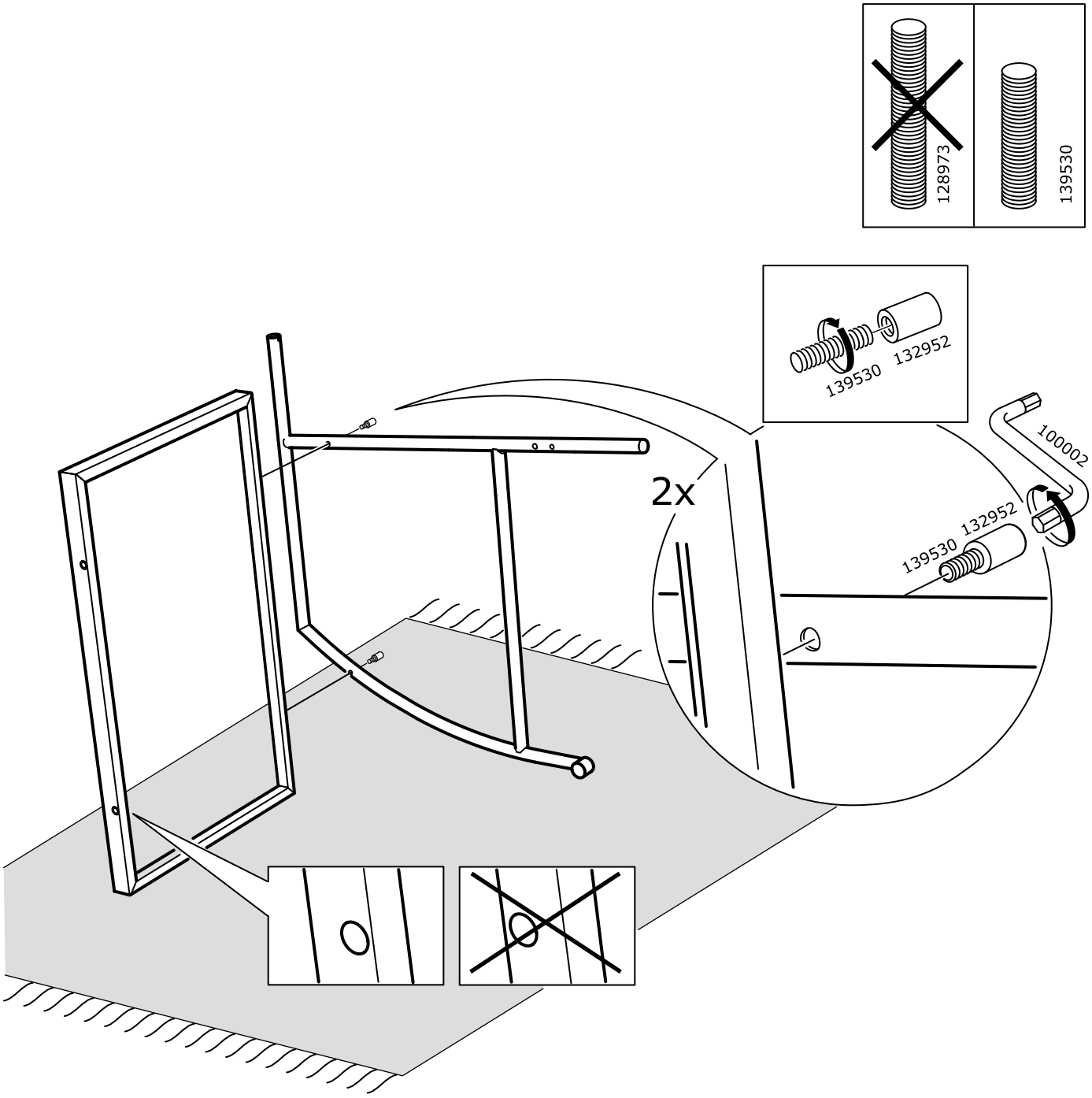

## 2

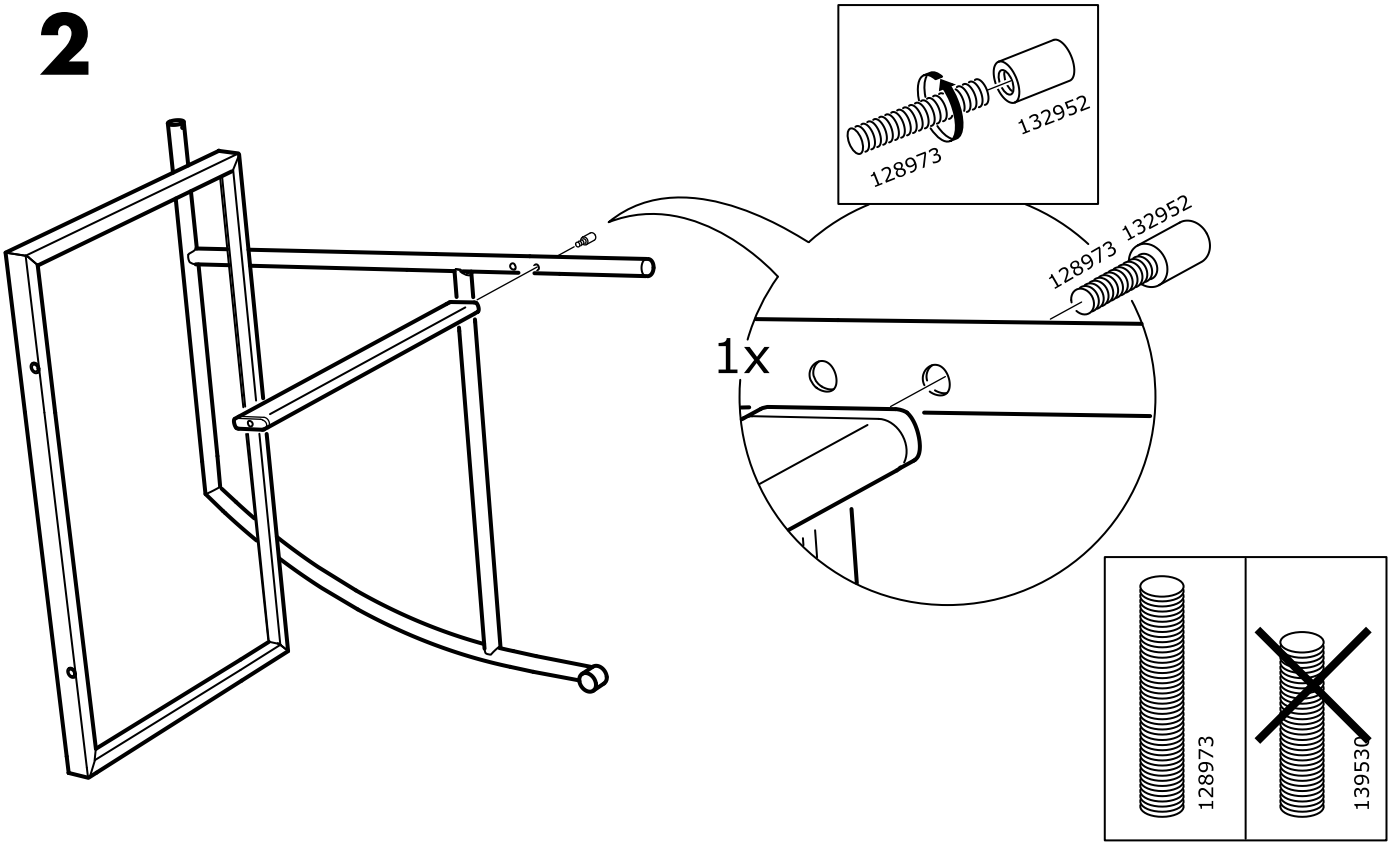


## 3

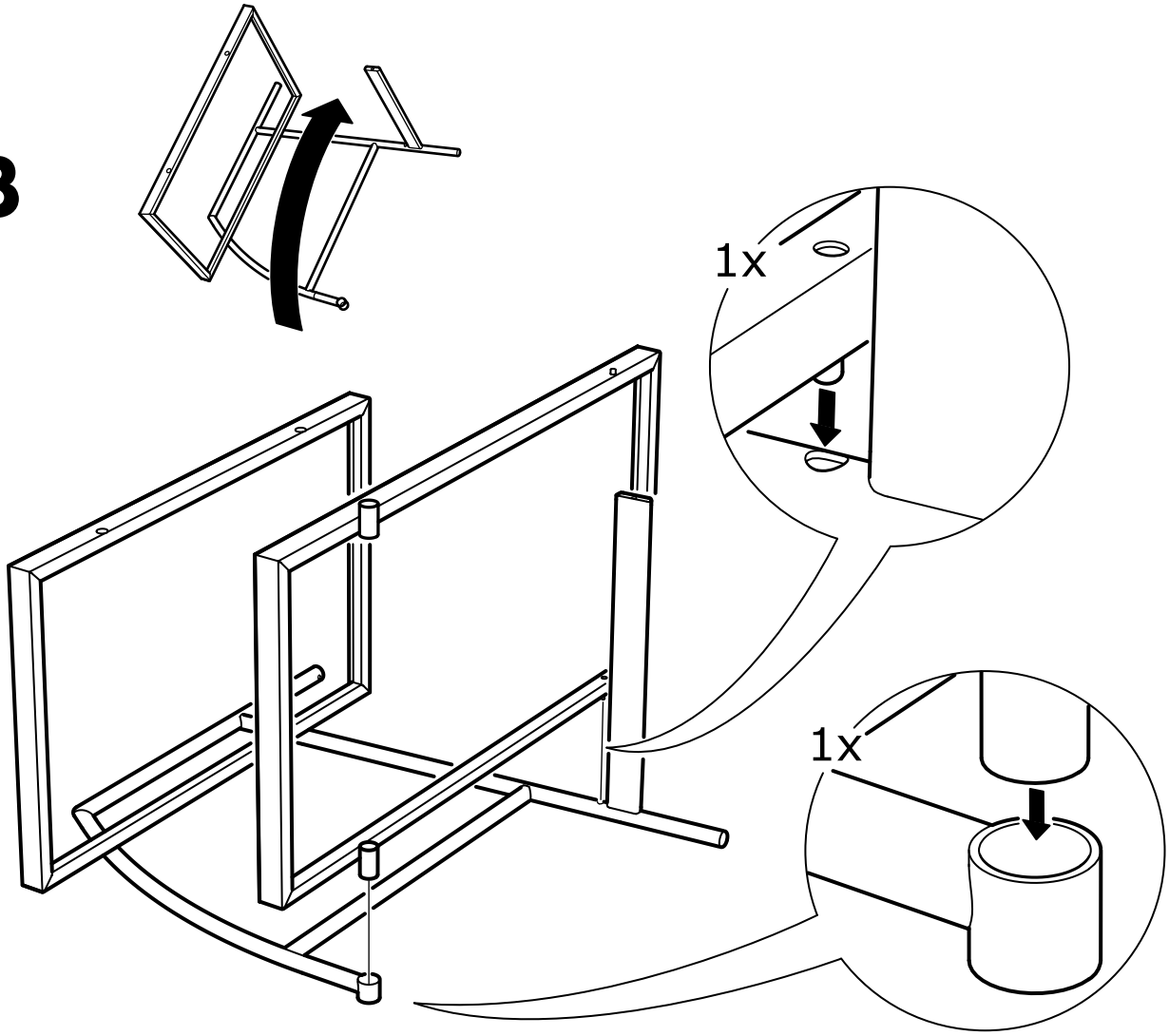

# 4

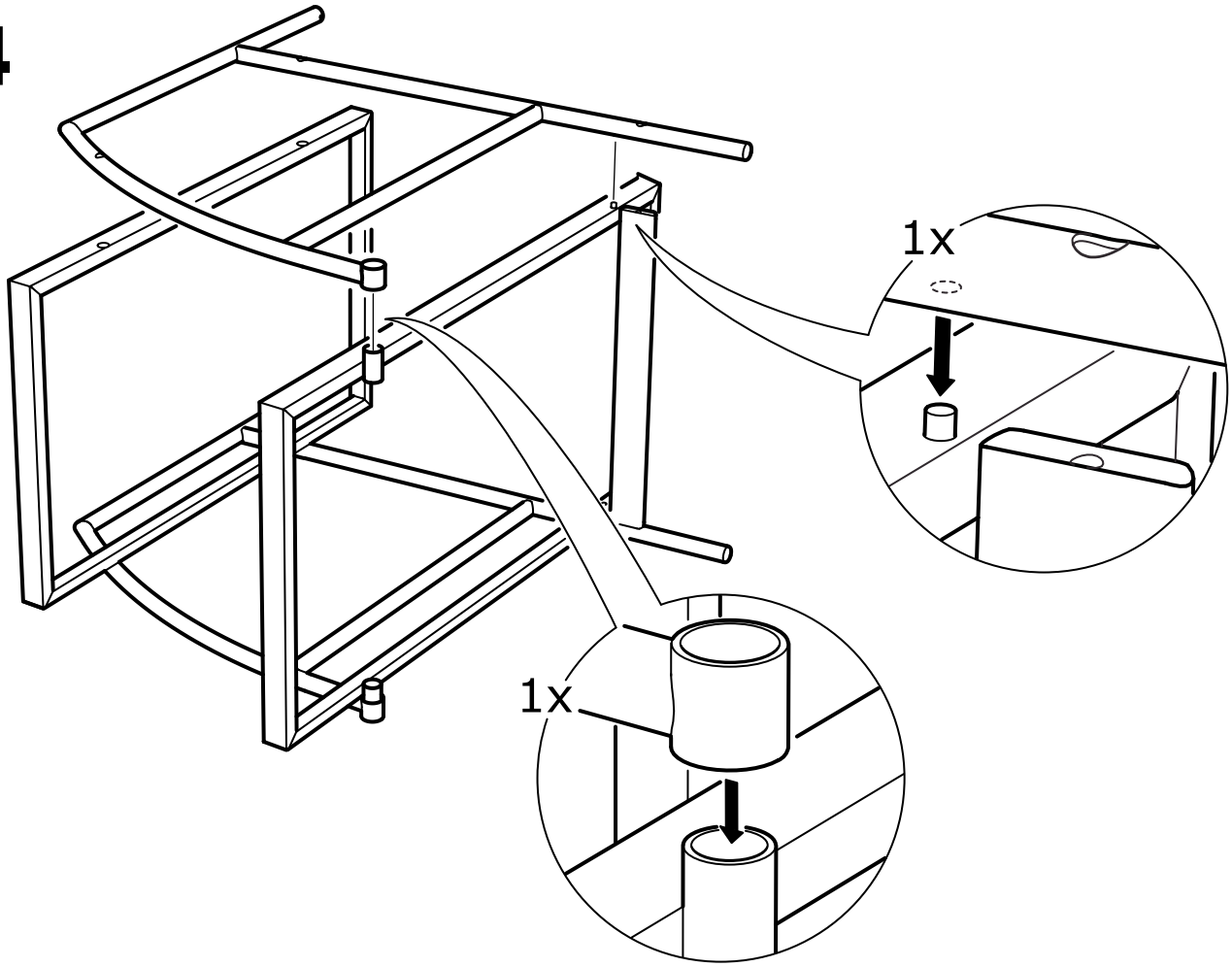


# 5

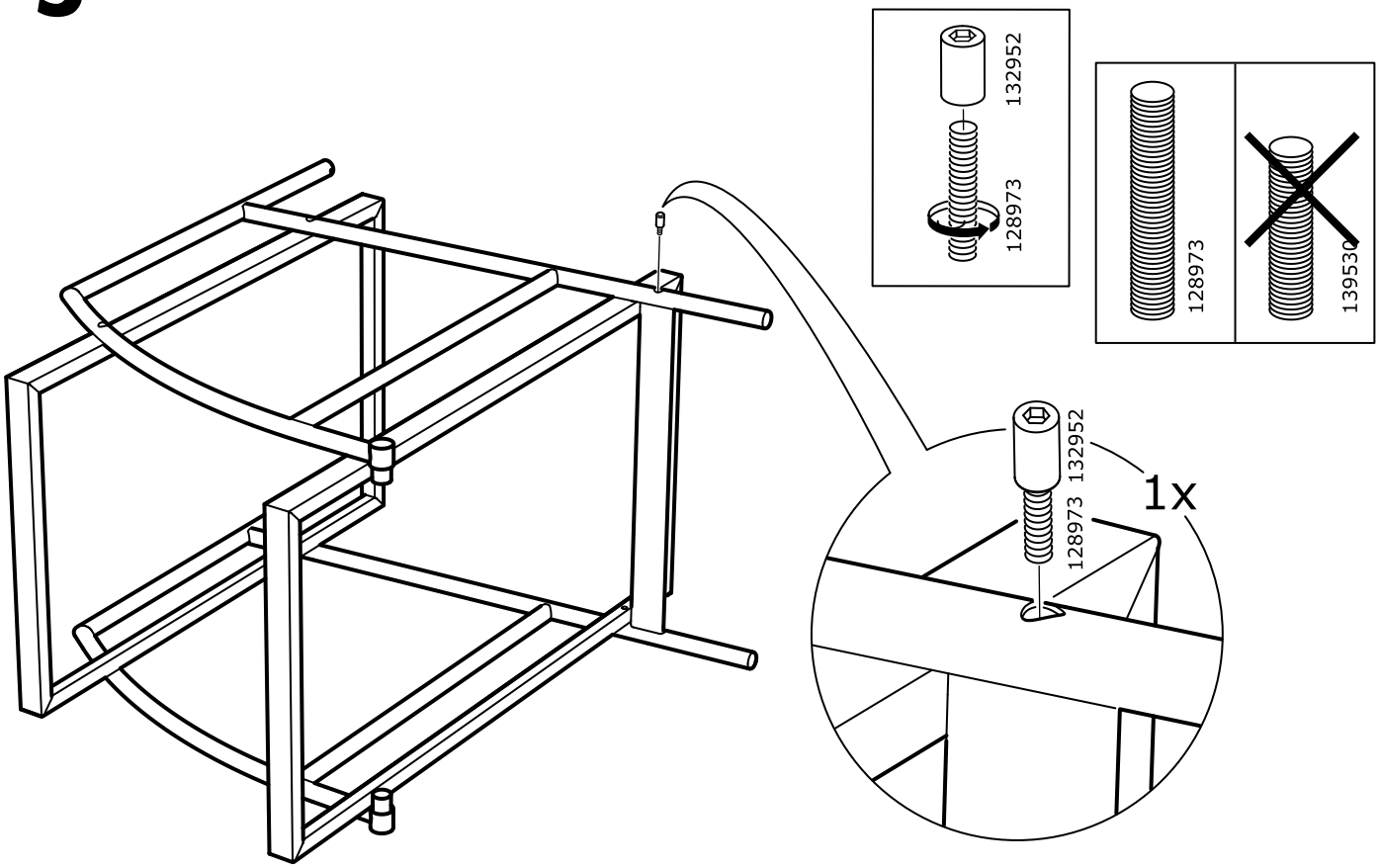

# 6

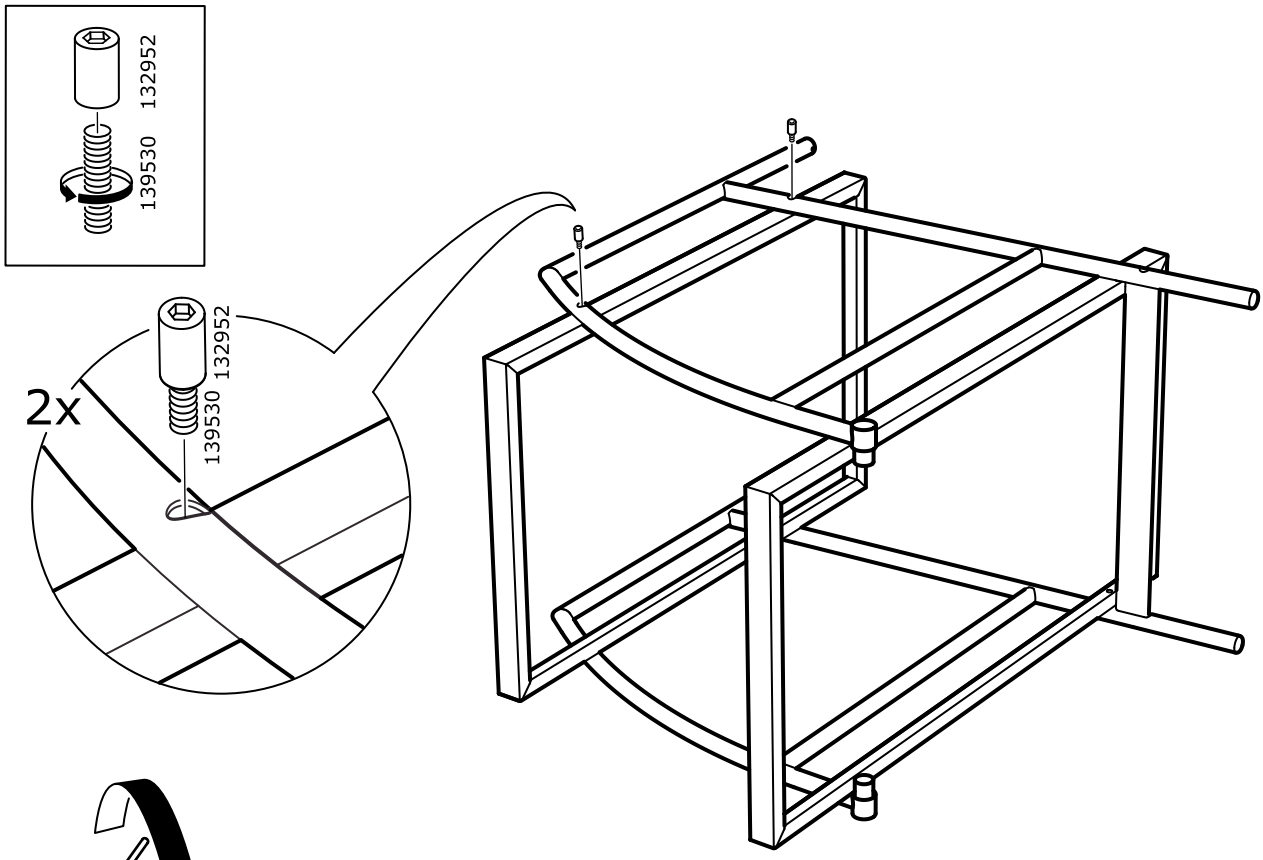


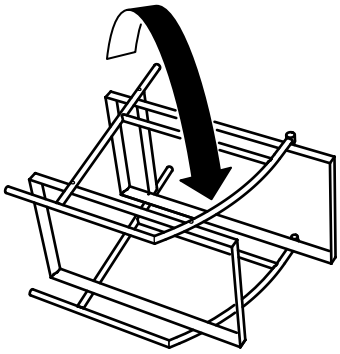

# 7

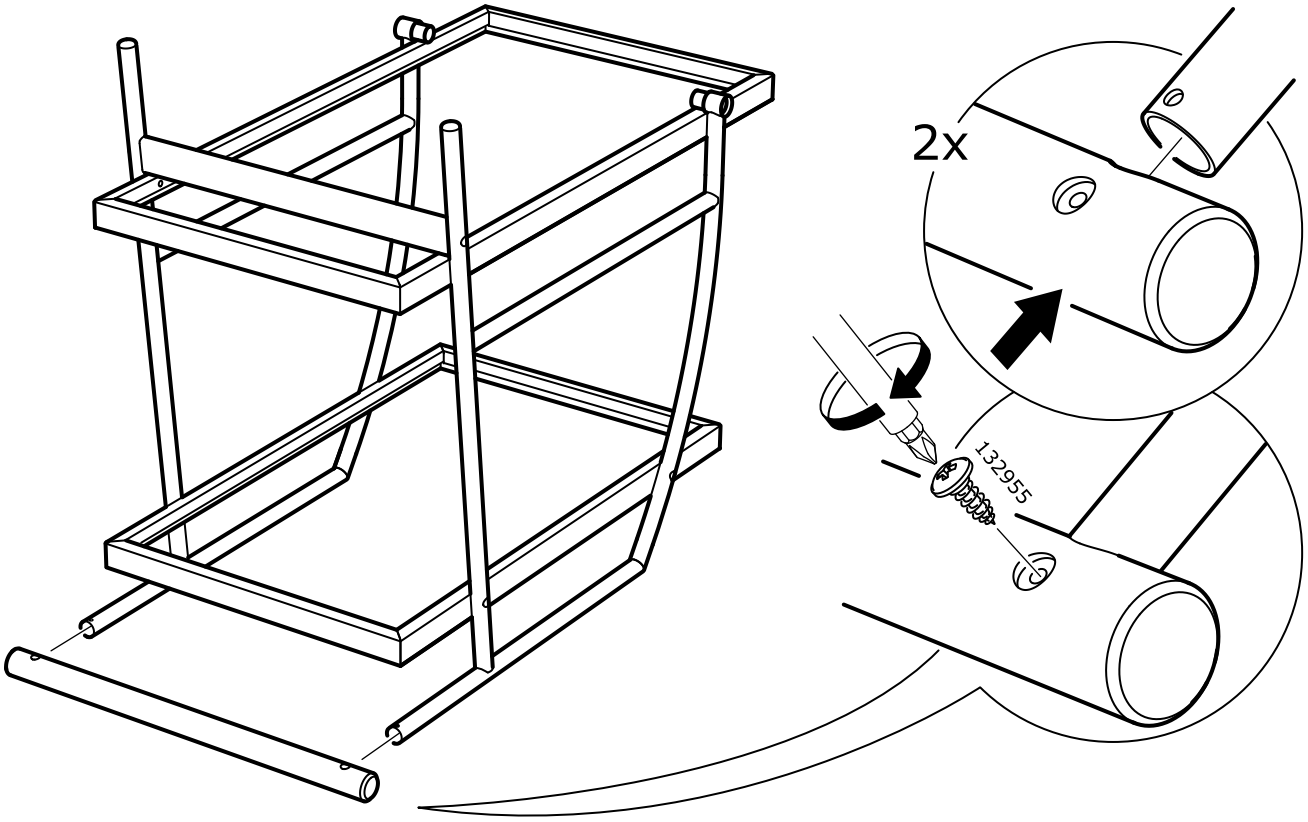

# 8

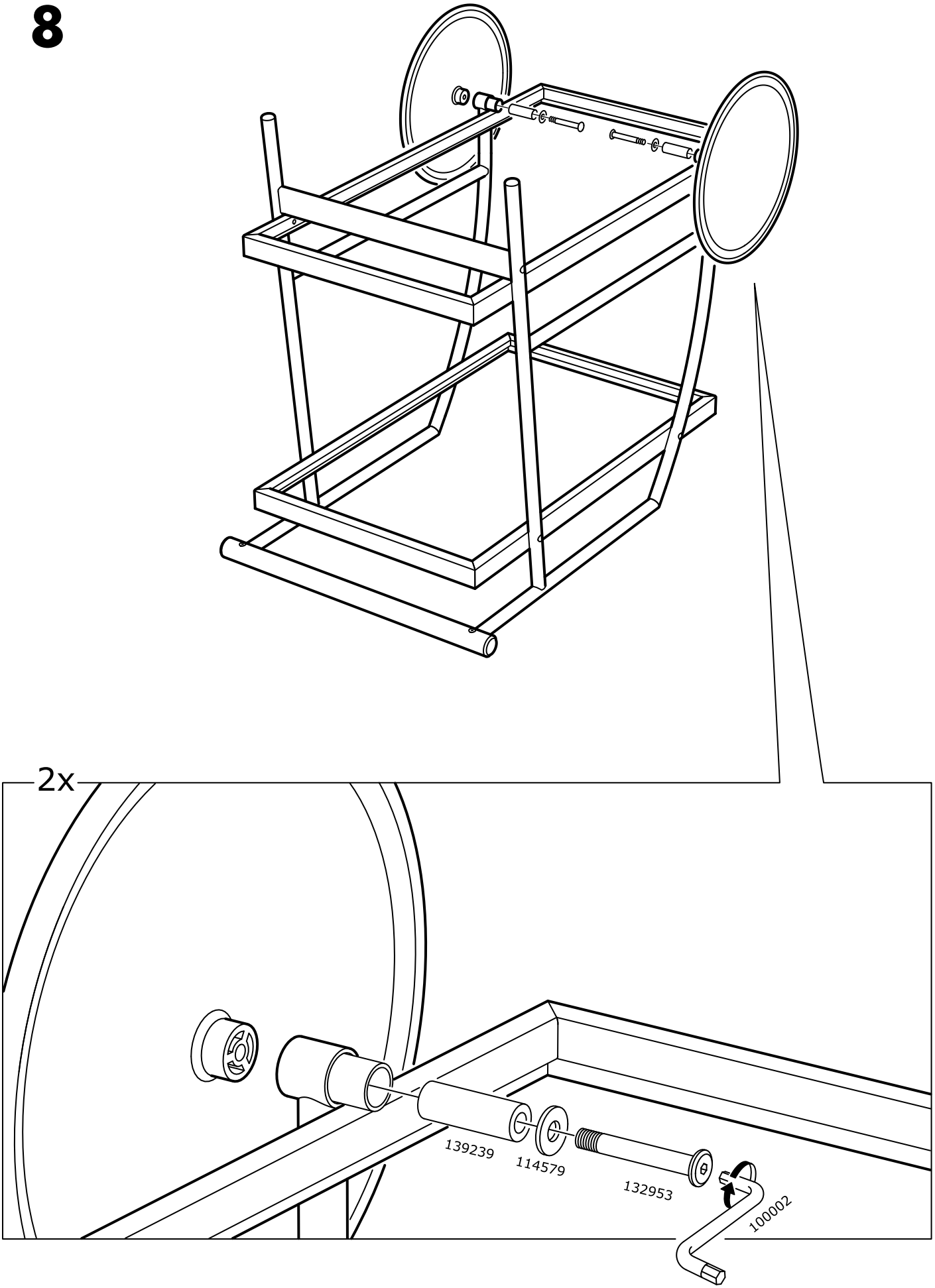

# 9

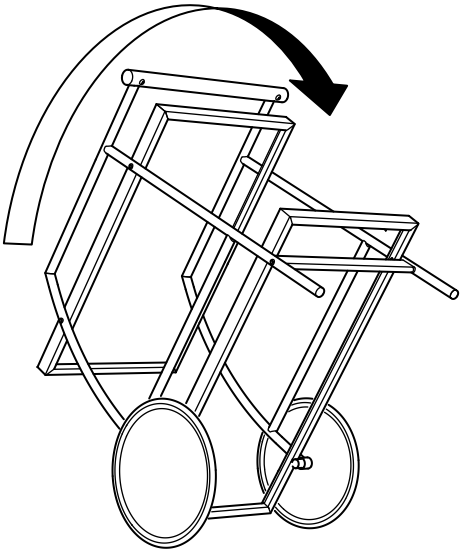

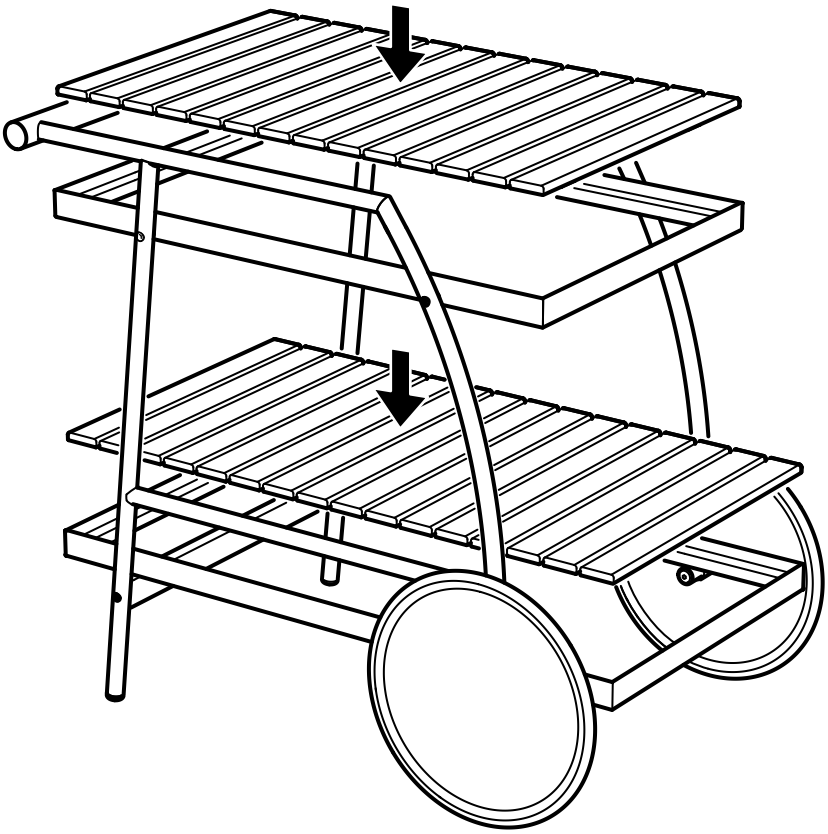


© Inter IKEA Systems B.V. 2013